Installation and Operation Instructions

Superior® Vented Gas Log and Burner Set

P/N 900467-01 Rev. B 01/2019

NATIONAL FIREPLACE INSTITUTE NFI CERTIFIED www.nficertified.org

We recommend that our gas hearth products be installed and serviced by professionals who are certified in the U.S. by the National Fireplace Institute® (NFI) as NFI Gas Specialists.

PFS® US
Report No. 10-87

Models

MNF30ONM	MNF30OPM

For use with log sets

LMF30GT A&B	LMF30MO A&B
LMF36GT A&B	LMF36MO A&B

WHEN USED AS AN OUTDOOR APPLIANCE

⚠ DANGER

CARBON MONOXIDE WARNING

- This appliance can produce carbon monoxide which has no odor.
- Using it in an enclosed space can kill you.
- Never use this appliance in an enclosed space such as a camper, tent, car or home.

⚠ WARNING: For Outdoor Use Only.

⚠ DANGER

IF YOU SMELL GAS:

1. Shut off gas to appliance.
2. Extinguish any open flame.
3. If odor continues, keep away from the appliance and immediately call your gas supplier or fire department.

⚠ WARNING: No not store gasoline or other flammable vapors and liquids in the vicinity of this or any other appliance. An LP-cylinder not connected for use shall not be stored in the vicinity of this or any other appliance.

⚠ WARNING: Improper installation, adjustment, alteration, service or maintenance can cause injury or property damage. Read the installation, operating and maintenance instructions thoroughly before installing or servicing this equipment.

WHEN USED AS INDOOR VENTED APPLIANCE

⚠ WARNING:

FIRE OR EXPLOSION HAZARD
Failure to follow safety warnings exactly could result in serious injury, death, or property damage.

- Do not store or use gasoline or other flammable vapors and liquids in the vicinity of this or any other appliance.
- WHAT TO DO IF YOU SMELL GAS
  - Do not try to light any appliance.
  - Do not touch any electrical switch; do not use any phone in your building.
  - Leave the building immediately.
  - Immediately call your gas supplier from a neighbor's phone. Follow the gas supplier's instructions.
  - If you cannot reach your gas supplier, call the fire department.
- Installation and service must be performed by a qualified installer, service agency or the gas supplier.

INSTALLER: Leave this manual with the appliance.
CONSUMER: Retain this manual for future reference.

P900467-01

TABLE OF CONTENTS

Safety 2
Product Identification 3
Local Codes 4
Optional Remote Control Accessories 4
Unpacking 4
Product Features 4
Installation 4
Operation 15
Inspecting Burners 16
Cleaning and Maintenance 16
Specifications 18
Wiring Diagram 18
Troubleshooting 19
Accessories 23
Parts 24
Replacement Parts 28
Service Hints 28
Technical Service 28
Warranty 29

SAFETY

⚠ WARNING: Improper installation, adjustment, alteration, service or maintenance can cause injury or property damage. Refer to this manual for correct installation and operational procedures. For assistance or additional information consult a qualified installer, service agency or the gas supplier.

⚠ WARNING: This appliance is for installation only in a solid-fuel burning masonry or UL127 factory-built fireplace or in a listed outdoor fireplace. Do not install this appliance in an unvented fireplace indoors.

⚠ WARNING: Fireplace must be operated only with doors fully open.

This appliance may be installed in an aftermarket,* permanently located, manufactured (mobile) home, where not prohibited by local codes.

This appliance is only for use with the type of gas indicated on the rating plate. This appliance is not convertible for use with other gases.

*** Aftermarket: Completion of sale, not for purpose of resale, from the manufacturer**

⚠ WARNING: This product can expose you to chemicals including Carbon Black, which is known to the State of California to cause cancer, and Carbon Monoxide, which is known to the State of California to cause birth defects or other reproductive harm. For more information go to www.P65Warnings.ca.gov

IMPORTANT: Read this owner's manual carefully and completely before trying to assemble, operate or service this appliance. Improper use of this appliance can cause serious injury or death from burns, fire, explosion, electrical shock and carbon monoxide poisoning.

⚠ DANGER: Carbon monoxide poisoning may lead to death!

Carbon Monoxide Poisoning: Early signs of carbon monoxide poisoning resemble the flu, with headaches, dizziness or nausea. If you have these signs, the fireplace may not be working properly. **Get fresh air at once!** Have fireplace serviced. Some people are more affected by carbon monoxide than others. These include pregnant women, people with heart or lung disease or anemia, those under the influence of alcohol and those at high altitudes.

Natural and Propane/LP gases are odorless. An odor-making agent is added to these gases. The odor helps you detect a gas leak. However, the odor added to the gas can fade. Gas may be present even though no odor exists.

Make certain you read and understand all warnings. Keep this manual for reference. It is your guide to safe and proper operation of this fireplace.

⚠ WARNING: Any change to this appliance or its controls can be dangerous.

Solid fuels shall not be burned in a fireplace where a decorative appliance is installed.

Due to high temperatures, the appliance should be located out of traffic and away from furniture and draperies.

Do not place clothing or other flammable material on or near the appliance. Never place any objects on the appliance.

Appliance base assembly becomes very hot when running appliance. Keep children and adults away from hot surface to avoid burns or clothing ignition. Appliance will remain hot for a time after shutdown. Allow surface to cool before touching.

Carefully supervise young children when they are in the room with appliance. When using the hand-held remote accessory, keep selector switch in the OFF position to prevent children from turning on burners with remote.

You must operate this appliance with the fireplace screen and hood in place. Make sure fireplace screen and hood are in place before running appliance. The fireplace screen shall have openings for introduction of combustion air.

Keep the appliance area clear and free from combustible materials, gasoline and other flammable vapors and liquids.

SAFETY
Continued

1. This appliance is only for use with the type of gas indicated on the rating plate. This appliance is not convertible for use with other gases.
2. Do not place propane/LP supply tank(s) inside any structure. Locate propane/LP supply tank(s) outdoors (propane/LP units only).
3. If you smell gas
   - shut off gas supply
   - do not try to light any appliance
   - do not touch any electrical switch; do not use any phone in your building
   - immediately call your gas supplier from a neighbor's phone. Follow the gas supplier's instructions
   - if you cannot reach your gas supplier, call the fire department
4. This appliance shall not be installed in a bedroom or bathroom, unless installed as a vented appliance. See *Installing Damper Clamp Accessory for Vented Operation*, ***Page 7***. This gas log set may not be installed as a vented appliance in a bedroom or bathroom in the Commonwealth of Massachusetts.
5. Before installing in a solid fuel burning fireplace, the chimney flue and firebox must be cleaned of soot, creosote, ashes and loose paint by a qualified chimney cleaner. Creosote will ignite if highly heated. A dirty chimney flue may create and distribute soot within the house. Inspect chimney flue for damage. If damaged, repair flue and firebox before operating appliance.
6. If fireplace has glass doors, never operate this appliance with glass doors closed. If you operate appliance with doors closed, heat buildup inside fireplace will cause glass to burst. Make sure there are no obstructions across openings of fireplace.
7. To prevent the creation of soot, follow the instructions in *Cleaning and Maintenance*, ***Page 16***.
8. Before using furniture polish, wax, carpet cleaner or similar products, turn appliance off. If heated, the vapors from these products may create a white powder residue within burner box or on adjacent walls and furniture.
9. Do not use this appliance as a wood burning appliance. Use only the logs provided with the appliance. Do not burn solid fuels in this appliance.
10. Do not run appliance
    - where flammable liquids or vapors are used or stored
    - under dusty conditions
11. Do not use this appliance to cook food or burn paper or other objects.
12. Do not use this appliance if any part has been exposed to or under water. Immediately call a qualified service technician to inspect the room appliance and to replace any part of the control system and any gas control which has been under water.
13. Do not operate appliance if any log is broken.
14. Turn appliance off and let cool before servicing, installing or repairing. Only a qualified service person should install, service or repair appliance.
15. This appliances must not be connected to any external electrical source.
16. Operating appliance above elevations of 4,500 feet may cause pilot outage.
17. To prevent performance problems, do not use propane/LP fuel tank of less than 100 lb. capacity (propane/LP units only).
18. Provide adequate clearances around air openings.
19. Do not operate fireplace if any log is broken.

If used with MFEB accessory ember burner, this appliance shall only be installed in a wood burning fireplace.

WARNING: This appliance shall not be installed in a room or space unless the required volume of indoor combustion air is proved by the method described in the *National Fuel Gas Code, ANSI Z223.1/NFPA 54,* the *International Fuel Gas Code.*

Any part removed for servicing the appliance must be replaced prior to operating the appliance.

When installing as a vented appliance in a manufactured home or mobile home, the installation must conform with the Manufactured Home Construction and Safety Standard, Title 24 CFR, Part 3280 or when standard is not applicable, with *Manufacture Home Installations Standard, ANSI/NCSBCS A225.1/NFPZ 501A.*

PRODUCT IDENTIFICATION

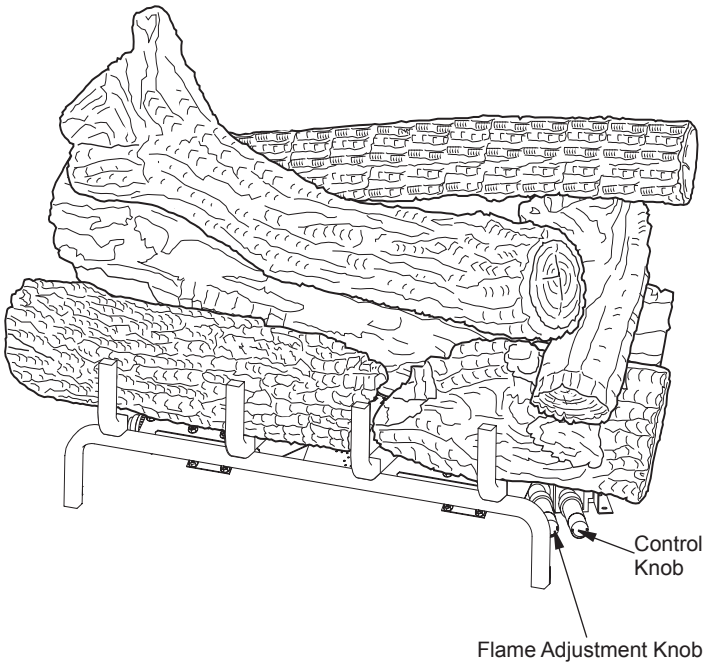

MNF30O Model Series
Figure 1 - Product Identification

LOCAL CODES

Install and use appliance with care. Follow all local codes. In the absence of local codes, use the latest edition of *The National Fuel Gas Code, ANSI Z223.1/NFPA 54** or CSA B149.1.

*Available from:

American National Standards Institute, Inc.
25 West 43rd Street, 4th floor
New York, NY 10036

National Fire Protection Association, Inc.
1 Batterymarch Park
Quincy, MA 02169-7471

State of Massachusetts: The installation must be made by a licensed plumber or gas fitter in the Commonwealth of Massachusetts.

Sellers of unvented propane or natural gas-fired supplemental room appliances shall provide to each purchaser a copy of 527 CMR 30 upon sale of the unit.

Vent-free gas products are prohibited for bedroom and bathroom installation in the Commonwealth of Massachusetts.

OPTIONAL REMOTE CONTROL ACCESSORIES

There are optional remote controls that can be purchased separately for Remote-Ready Models Only:

- wall switch
- hand-held ON/OFF remote

See *Accessories*, ***Page 23***.

UNPACKING

⚠ CAUTION: Do not remove the data plates from the grate assembly. The data plates contain important warranty and safety information.

1. Remove logs and appliance base assembly from carton(s).
2. Remove all protective packaging applied to logs and appliance for shipment.
3. Check appliance for any shipping damage. If appliance is damaged, promptly inform dealer where you purchased the appliance.

PRODUCT FEATURES

OPERATION

This appliance is dual listed as a vented decorative gas appliance to ANSI Z21.60 for use indoors in wood burning fireplaces and as an outdoor decorative gas appliance to ANSI Z21.97. When operated as an outdoor decorative gas appliance, it must be installed outdoors in a site built wood burning fireplace or a UL 127 listed wood burning fireplace designed for outdoor use or in an unvented outdoor fireplace.

If optional accessory MFEB is used, the fireplace in which the appliance is installed must have a working vent/flue as described within these instructions.

ELECTRONIC IGNITION SYSTEM

This appliance has an electronic igniter to light appliance fuel supply.

INSTALLATION

⚠ WARNING: A qualified service person must install appliance. Follow all local codes.

NOTICE: State or local codes may only allow operation of this appliance in a vented configuration. Check your state or local codes.

⚠ WARNING: Make sure the selector switch is in the OFF position before installing appliance.

⚠ WARNING: Never install the appliance

- **in a recreational vehicle**
- **where curtains, furniture, clothing or other flammable objects are less than 36" from front, 42" from top of appliance; for side clearances see *Figure 2, Page 5***
- **in high traffic areas**
- **in windy or drafty areas**

OUTDOOR ENCLOSURE REQUIREMENTS

This appliance is considered to be installed outdoors if installed with shelter no more inclusive than:

1. With walls on all sides, but with no overhead cover;
2. Within a partial enclosure which includes an overhead cover and no more than two side walls. These side walls may be parallel, as in a breezeway or at right angles to each side; or
3. Within a partial enclosure which includes an overhead cover and three side walls; as long as 30% or more of the horizontal periphery of the enclosure is permanently open.

This appliance must be installed in an approved fireplace. When installed indoors or either indoors or outdoors with optional ember burner MFEB, the appliance must be installed in a wood burning fireplace with the flue damper in the open position. This appliance may only be installed in a fireplace with no flue when installed in an approved outdoor fireplace. When installed in an outdoor fireplace with no flue, optional ember burner MFEB may not be used.

CHECK GAS TYPE

Use the correct type of gas (natural or propane/LP). If your gas supply is not the correct gas type, do not install appliance. Call dealer where you bought appliance for proper type appliance.

⚠ WARNING: This appliance is equipped for either natural gas or propane/LP gas but not both. Gas type is indicated on the rating plate. Field conversion is not permitted.

INSTALLATION AND CLEARANCES

⚠ WARNING: Maintain the minimum clearances. If you can, provide greater clearances from floor, ceiling and adjoining wall.

MINIMUM FIREPLACE CLEARANCE TO COMBUSTIBLE MATERIALS

Side Wall 16", Ceiling 42"
Floor 5", Front: 36"

LOG SIZING REQUIREMENTS*				
Log Size	Minimum Firebox Size			
	Height	Depth	Front Width	Rear Width
LMF30MOA/B	29"	15.5"	39"	26.75"
LMF36MOA/B	29"	20"	47"	33"
LMF30GTA/B	29"	15.5"	39"	26.75"
LMF36GTA/B	29"	20"	47"	33"

* When optional MFEB (MAGNIFLAME EMBER BURNER KIT) is used with these burner systems, the minimum firebox sizes are different. See MFEB instructions for minimum firebox sizes if this accessory is used.

Carefully follow the instructions below. This will ensure safe installation into a masonry, UL127-listed manufactured fireplace or listed outdoor firebox.

Minimum Clearances For Side Combustible Material, Side Wall and Ceiling

A. Clearances from the side of the fireplace cabinet to any combustible material and wall should follow diagram in ***Figure 2***.

   Example*:* The face of a mantel, bookshelf, etc. is made of combustible material and protrudes 3-1/2" from the wall. This combustible material must be 4" from the side of the fireplace cabinet *(see **Figure 2**).*

   NOTE*: When installing your gas logs into a manufactured firebox, follow firebox manufacturer's instructions for minimum clearances to combustible materials.*

B. Clearances from the top of the fireplace opening to the ceiling should not be less than 42".

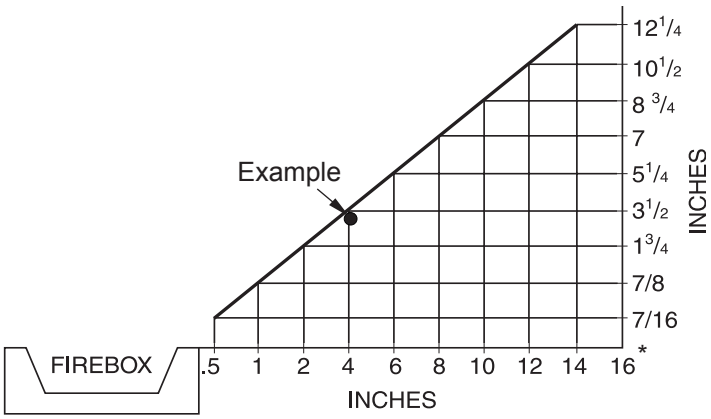

*Minimum 16" from Side Wall

Figure 2 - Minimum Clearance for Combustible to Wall

Minimum Noncombustible Material Clearances

If Not Using Mantel

NOTE*: If using a mantel proceed to <u>If Using Mantel</u>. If not using a mantel, follow these instructions*.

You must have noncombustible material(s) above the fireplace opening. Noncombustible materials (such as slate, marble, tile, etc.) must be at least 1/2" thick. With sheet metal, you must have noncombustible material behind it. Noncombustible material must extend at least 8" up (for all models). If noncombustible material is less than 12", you must install the fireplace hood accessory. See ***Figure 3*** for minimum clearances.

Noncombustible Material Distance (A)	Requirements for Safe Installation
12" or more	Noncombustible material OK.
Between 8" and 12"	Install fireplace hood accessory (GA6050 - see <u>Accessories</u>, ***Page 23***).
Less than 8"	Noncombustible material must be extended to at least 8". See <u>Between 8" and 12"</u>, above. If you cannot extend material, you must operate appliance with flue damper open.

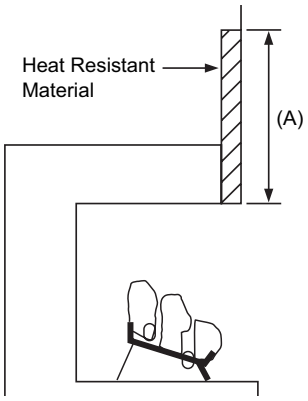

Figure 3 - Heat Resistant Material (Slate, Marble, Tile, etc.) Above Fireplace

If Using Mantel

You must have noncombustible material(s) above the fireplace opening. Noncombustible materials (such as slate, marble, tile, etc.) must be at least 1/2" thick. With sheet metal, you must have noncombustible material behind it. Noncombustible material must extend at least 8" up (for all models). If noncombustible material is less than 12", you must install the fireplace hood accessory. Even if noncombustible material is more than 12", you may need the hood accessory to deflect heat away from your mantel shelf. See ***Figure 3 and Figures 4 and 5, Page 6***, for minimum clearances.

IMPORTANT*:* If you cannot meet these minimum clearances, you must operate appliance with chimney flue damper open. Go to <u>*Installing Damper Clamp Accessory for Vented Operation*</u>, ***Page 7***.

MANTEL CLEARANCES

In addition to meeting noncombustible material clearances, you must also meet required clearances between fireplace opening and mantel shelf. If you do not meet the clearances listed below, you will need a hood.

Determining Minimum Mantel Clearance

If you meet minimum clearance between mantel shelf and top of fireplace opening, a hood is not required *(see **Figure 4, Page 6**)*.

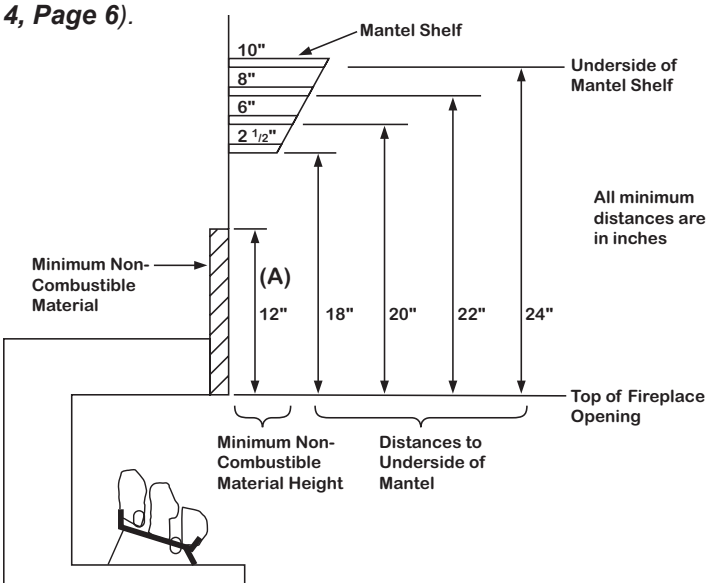

Figure 4 - Minimum Mantel Clearances Without Using Hood

Determining Minimum Mantel Clearance When Using a Hood

If minimum clearances in ***Figure 4***, are not met, you must have a hood. When using a hood there are still certain minimum mantel clearances required. Follow minimum clearances shown in ***Figure 5***, when using hood.

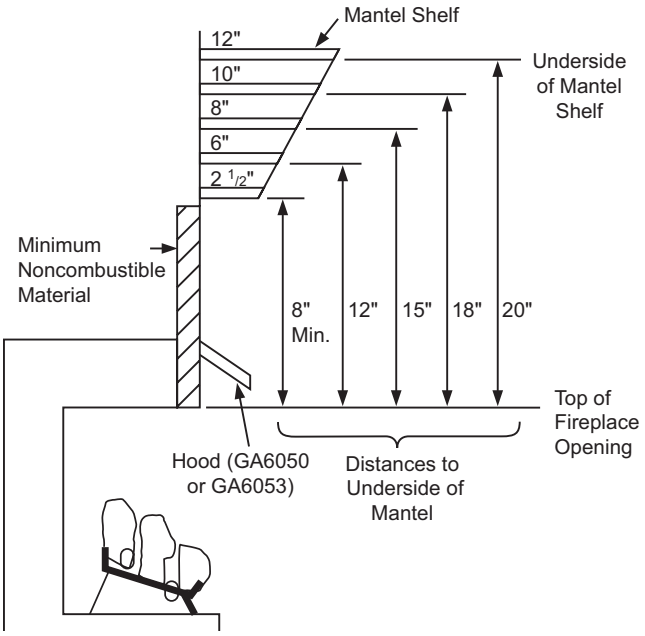

Figure 5 - Minimum Mantel Clearances When Using Hood

Minimum clearance requirements include any projections such as shelves, window sills, mantels, etc. above the appliance.

NOTICE: Surface temperatures of adjacent walls and mantels become hot during operation. Walls and mantels above the firebox may become hot to the touch. If installed properly, these temperatures meet the requirement of the national product standard. Follow all minimum clearances shown in this manual.

NOTICE: If your installation does not meet the minimum clearances shown, you must do one of the following:

- **operate the logs only with the flue damper open**
- **raise the mantel to an acceptable height**
- **remove the mantel**

FLOOR CLEARANCES

A. If installing appliance on the floor level, you must maintain the minimum distance of 14" to combustibles *(see **Figure 6**)*.

B. If combustible materials are less than 14" to the fireplace, you must install appliance at least 5" above the combustible flooring *(see **Figure 7**)*.

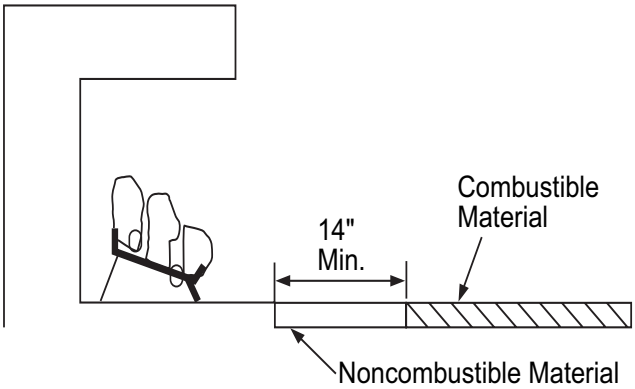

Figure 6 - Minimum Fireplace Clearances If Installed at Floor Level

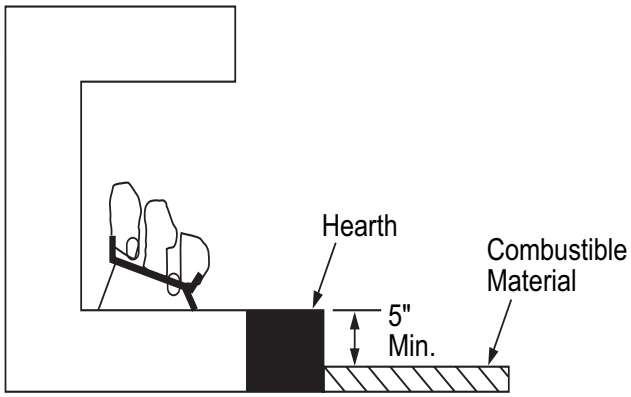

Figure 7 - Minimum Fireplace Clearances Above Combustible Flooring

INSTALLING DAMPER CLAMP ACCESSORY FOR VENTED OPERATION

***NOTE**: When used as a vented indoor appliance, appliance must be installed only in a solid-fuel burning fireplace with a working flue and constructed of noncombustible material.*

For Massachusetts Residents Only: Installation of this gas log set as a vented indoor appliance in the Commonwealth of Massachusetts requires the damper be permanently removed or welded in the fully open position.

You must install the damper clamp accessory *(to order, see Accessories, **Page 23**)*. This will ensure vented operation *(see **Figure 8**)*. The damper clamp will keep damper open. Installation instructions are included with clamp accessory.

See chart below for minimum permanent flue opening you must provide. Attach damper clamp so the minimum permanent flue opening will be maintained at all times.

Area of Various Standard Round Flues	
Diameter	**Minimum Required Area**
5"	20 sq. inches
6"	29 sq. inches
7"	39 sq. inches
8"	51 sq. inches

Chimney Height	Minimum Permanent Flue Opening
6' to 15'	39 sq. inches
15' to 30'	29 sq. inches

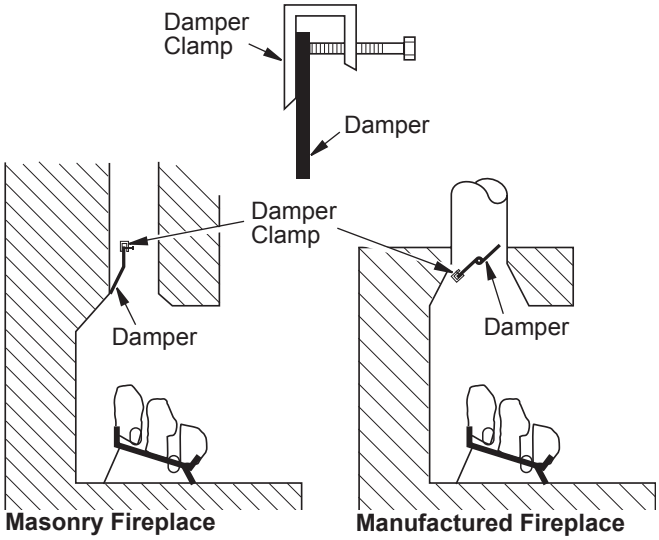

Figure 8 - Attaching Damper Clamp

WARNING: DO NOT INSTALL IN SLEEPING ROOM OF MOBILE HOMES.

INSTALLING APPLIANCE BASE ASSEMBLY

⚠ WARNING: You must secure this appliance to fireplace floor. If not, appliance will move when you adjust controls. Moving appliance may cause a gas leak.

⚠ WARNING: If installing in a sunken fireplace, special care is needed. You must raise the fireplace floor to allow access to appliance control panel. This will ensure adequate air flow and guard against sooting and controls being damaged. Raise fireplace floor with noncombustible material. Make sure material is secure.

Installation Items Needed

- hardware package (provided with appliance)
- approved flexible gas hose and fittings provided (if allowed by local codes)
- sealant (resistant to propane/LP gas, not provided)
- electric drill with 3/16” masonry drill bit

***NOTE**: Install optional MRC Series receiver and hand-held remote control kit (see Accessories, **Page 23**) before installing gas log appliance. See installation instructions included with the kit.*

1. Apply pipe joint sealant lightly to male threads of the 1/2 NPT side of gas fitting elbow (provided) and connect to inlet side of gas control. Remove gas fitting from flexible gas hose (provided) before connecting to elbow *(see **Figure 9**)*.
2. Position appliance base assembly in fireplace.
3. Mark screw locations through holes in front panel of base *(see **Figure 10, Page 8**)*. If installing in a brick-bottom fireplace, mark screw locations in mortar joint of bricks.
4. Remove appliance base from fireplace.
5. Drill holes at marked locations using 3/16" drill bit.
6. Attach base, through holes in back side panels of base, to fireplace floor using masonry screws provided in hardware package *(see **Figure 10, Page 8**)*.
7. Connect to gas supply. See *Connecting To Gas Supply*.

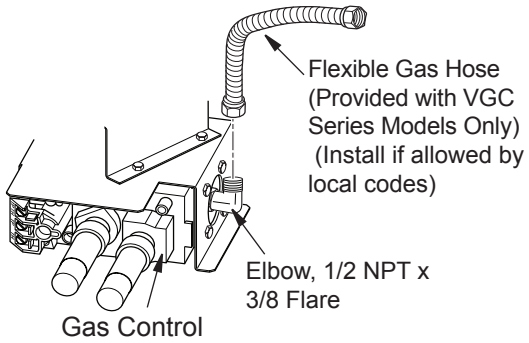

Figure 9 - Attaching Flexible Gas Hose to Appliance Gas Regulator

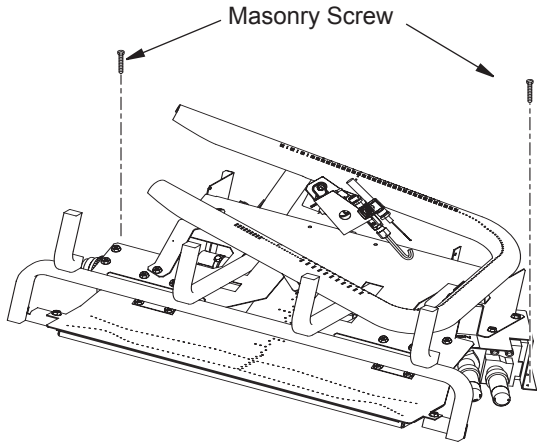

Figure 10 - Attaching Base to Fireplace Floor (Model Shown May Vary from Actual Model)

CONNECTING TO GAS SUPPLY

⚠ WARNING: This appliance requires a 1/2" NPT (National Pipe Thread) inlet connection to the pressure regulator.

⚠ WARNING: A qualified service person must connect appliance to gas supply. Follow all local codes.

⚠ CAUTION: Never connect propane/LP appliance directly to the propane/LP supply. This appliance requires an external regulator (not supplied). Install the external regulator between the appliance and propane/LP supply.

⚠ WARNING: Never connect natural gas appliance to private (non-utility) gas wells. This gas is commonly known as wellhead gas.

Installation Items Needed

Before installing appliance, make sure you have the items listed below.

- external regulator (supplied by installer)
- piping (check local codes)
- sealant (resistant to propane/LP gas)
- equipment shutoff valve *
- test gauge connection *
- sediment trap
- tee joint
- pipe wrench
- approved flexible gas line with gas connector (if allowed by local codes) (not provided)

* An equipment shutoff valve with 1/8" NPT tap is an acceptable alternative to test gauge connection. Purchase the optional equipment shutoff valve from your dealer.

For propane/LP units, the installer must supply an external regulator. The external regulator will reduce incoming gas pressure. You must reduce incoming gas pressure to between 11" and 14" of water. If you do not reduce incoming gas pressure, appliance regulator damage could occur. Install external regulator with the vent pointing down as shown in ***Figure 11***. Pointing the vent down protects it from freezing rain or sleet.

⚠ CAUTION: Use only new, black iron or steel pipe. Internally-tinned copper tubing may be used in certain areas. Check your local codes. Use pipe of 1/2" diameter or greater to allow proper gas volume to appliance. If pipe is too small, undue loss of volume will occur.

Installation must include an equipment shutoff valve, union and plugged 1/8" NPT tap. Locate NPT tap within reach for test gauge hook up. NPT tap must be upstream from appliance *(see **Figure 12, Page 9**)*.

IMPORTANT: Install equipment shutoff valve in an accessible location. The equipment shutoff valve is for turning on or shutting off the gas to the appliance.

Check your building codes for any special requirements for locating equipment shutoff valve to appliances.

Apply pipe joint sealant lightly to male NPT threads. This will prevent excess sealant from going into pipe. Excess sealant in pipe could result in clogged appliance valves.

⚠ WARNING: Use pipe joint sealant that is resistant to liquid petroleum (LP) gas.

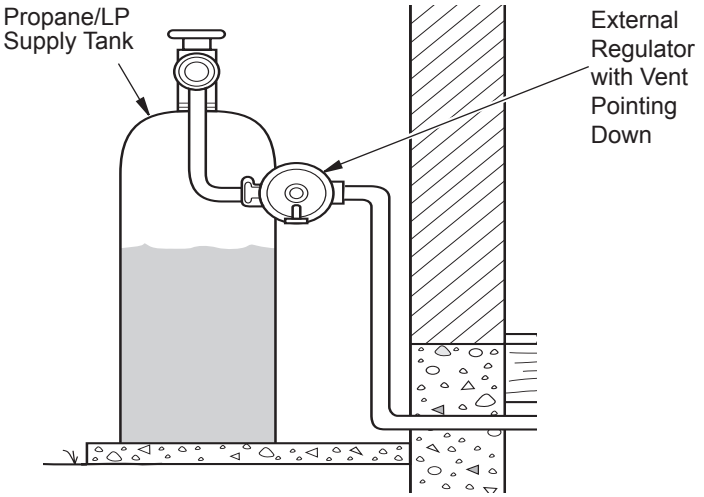

Figure 11 - External Regulator With Vent Pointing Down

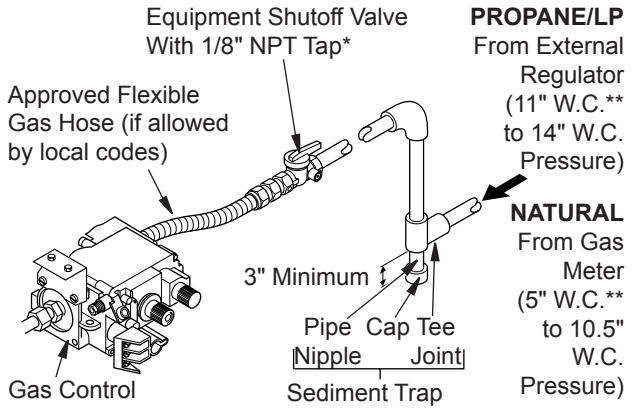

Figure 12 - Gas Connection

* Purchase the optional equipment shutoff valve from your dealer.

**Minimum inlet gas supply pressure for purpose of input adjustment.

We recommend that you install a sediment trap in supply line as shown in ***Figure 12***. Locate sediment trap where it is within reach for cleaning. Install in piping system between fuel supply and appliance. Locate sediment trap where trapped matter is not likely to freeze. A sediment trap traps moisture and contaminants. This keeps them from going into appliance controls. If sediment trap is not installed or is installed wrong, appliance may not run properly.

⚠ CAUTION: Avoid damage to gas control. Hold gas control with wrench when connecting it to gas piping and/or fittings.

CHECKING GAS CONNECTIONS

⚠ WARNING: Test all gas piping and connections, internal and external to unit, for leaks after installing or servicing. Correct all leaks at once.

⚠ WARNING: Never use an open flame to check for a leak. Apply a noncorrosive leak detection fluid to all joints. Bubbles forming show a leak. Correct all leaks at once.

⚠ CAUTION: Make sure external regulator has been installed between propane/LP supply and appliance. See guidelines under *Connecting to Gas Supply*, *Page 8*.

PRESSURE TESTING GAS SUPPLY PIPING SYSTEM

Test Pressures In Excess Of 1/2 PSIG (3.5 kPa)

1. Disconnect appliance with its appliance main gas valve (control valve) and equipment shutoff valve from gas supply piping system. Pressures in excess of 1/2 psig will damage appliance regulator.
2. Cap off open end of gas pipe where equipment shutoff valve was connected.
3. Pressurize supply piping system by either opening propane/LP supply tank valve for propane/LP gas or opening main gas valve located on or near gas meter for natural gas or using compressed air.
4. Check all joints of gas supply piping system. Apply noncorrosive leak detection fluid to all joints. Bubbles forming show a leak.
5. Correct all leaks at once.
6. Reconnect appliance and equipment shutoff valve to gas supply. Check reconnected fittings for leaks.

Test Pressures Equal To or Less Than 1/2 PSIG (3.5 kPa)

1. Close equipment shutoff valve *(see **Figure 13**)*.
2. Pressurize supply piping system by either opening propane/LP supply tank valve for propane/LP gas or opening main gas valve located on or near gas meter for natural gas or using compressed air.
3. Check all joints from gas meter to equipment shutoff valve for natural gas or propane/LP supply to equipment shutoff valve for propane/LP *(see **Figures 14 or 15, Pages 9-10**)*. Apply noncorrosive leak detection fluid to all joints. Bubbles forming show a leak.
4. Correct all leaks at once.

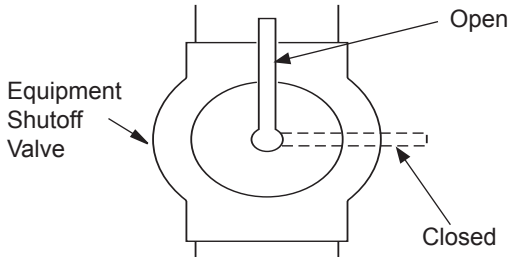

Figure 13 - Equipment Shutoff Valve

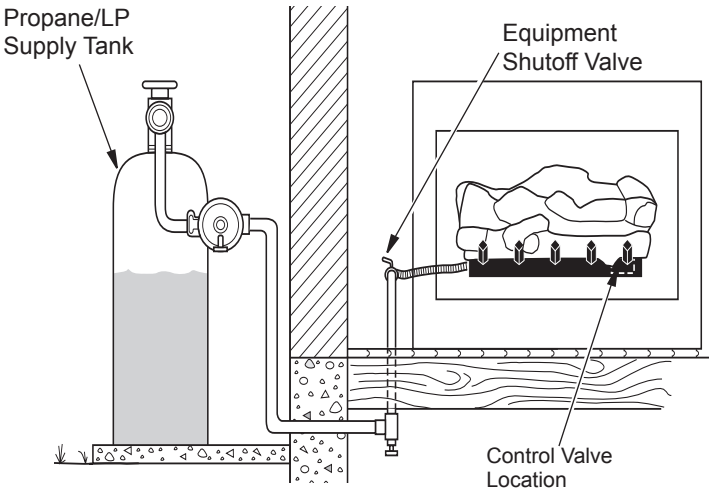

Figure 14- Checking Gas Joints (Propane/LP Only)

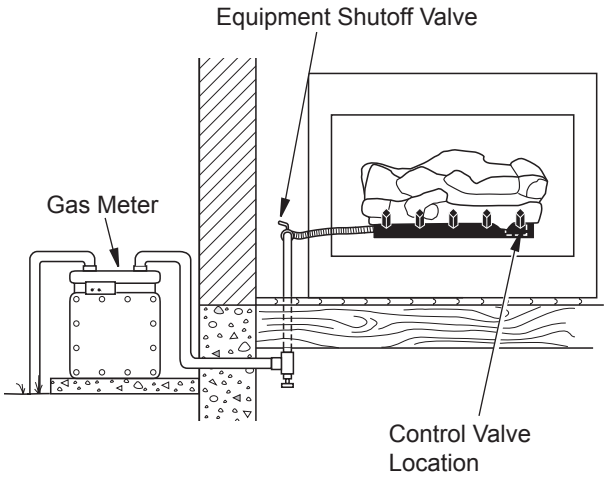

Figure 15 - Checking Gas Joints (Natural Gas Only)

PRESSURE TESTING APPLIANCE GAS CONNECTIONS

1. Open equipment shutoff valve *(see **Figure 13, Page 9**).*
2. Open main gas valve located on or near gas meter for natural gas or open propane/LP supply tank valve.
3. Make sure control knob of appliance is in the OFF position.
4. Check all joints from gas meter to equipment shutoff valve for natural gas or propane/LP supply to equipment shutoff valve for propane/LP *(see **Figure 14, Page 9 or Figure 15, Page 10**)*. Apply noncorrosive leak detection fluid to all joints. Bubbles forming show a leak.
5. Correct all leaks at once.
6. Light appliance (see Operation, ***Page 15***). Check all other internal joints for leaks.
7. Turn off appliance *(see To Turn Off Gas to Appliance, **Page 15** for Remote Ready models).*

INSTALLING SWITCH

The AUTO/OFF/ON switch for this log set is installed into the small single log accompanying this log set. This switch needs to be used only if remote or wall switch is not being used.

Connect the wires to the valve from the switch assembly as shown in ***Figure 16***.

INSTALLING OPTIONAL REMOTE ACCESSORIES

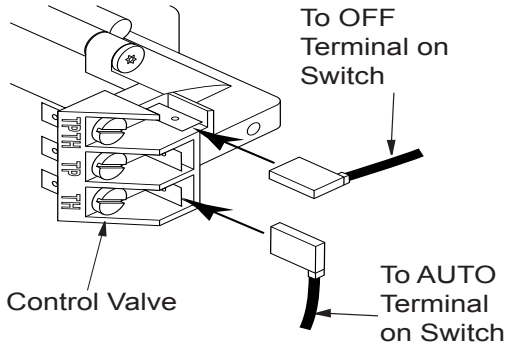

Figure 16 - Connecting Wires

Installing Remote Receiver

Remote control accessories are available separately *(see Accessories, **Page 23**).* Read instructions shipped with remote control along with instructions below before attempting installation.

1. If unit is already installed in fireplace, continue with these instructions. If unit has not been installed in fireplace, go to step 6 and continue installation of remote accessory.

⚠ WARNING: Turn off appliance and let cool before handling any part of appliance. Make sure gas is turned of to unit.

2. Carefully remove logs and set aside.
3. Locate mounting screws on sides of appliance base assembly and remove screws. Set screws aside for reinstallation.
4. Disconnect gas line from appliance base as shown in ***Figure 9, Page 7***.

⚠ WARNING: A qualified service person must connect and disconnect gas to appliance. Follow all local codes.

5. Remove appliance base from fireplace.
6. If installed, disconnect AUTO/OFF/ON switch wire from control valve at TPTH and TH locations *(see **Figure 17, Page 11**).*
7. Connect wires from hardware pack (with remote receiver bracket) to control valve at the TPTH and TH locations as shown in ***Figure 17***. Connect other ends of these wires to remote receiver wires.

***NOTE**: Make sure excess wire does not interfere with burner or pilot.*

8. If appliance was removed from fireplace before installation of remote accessory, see Installing Appliance Base Assembly on ***Page 7*** to reinstall appliance into fireplace. Test gas connection for leaks *(see Checking Gas Connections, **Page 9**)*.
9. If logs were removed from appliance for install remote accessory, replace logs (see Installing Logs, and Volcanic Stone, ***Page 11***).
10. Place remote receiver on fireplace floor next to control valve. Make sure the remote receiver and wires are not on or touching either gas burner on the log set.

Installing Batteries for Remote Receiver and Hand Held Remote Control

Follow instructions accompanying remote control accessory to install batteries.

***NOTE**: Only use alkaline batteries.*

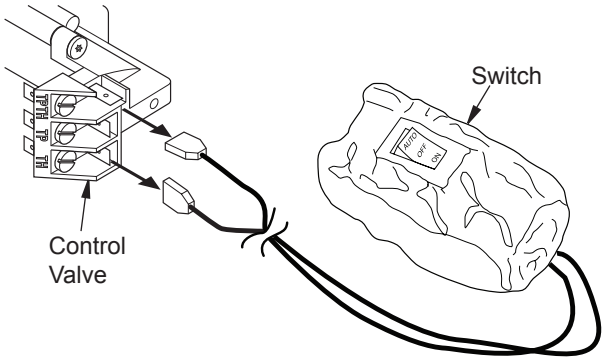

Figure 17- Disconnecting Switch from Control Valve

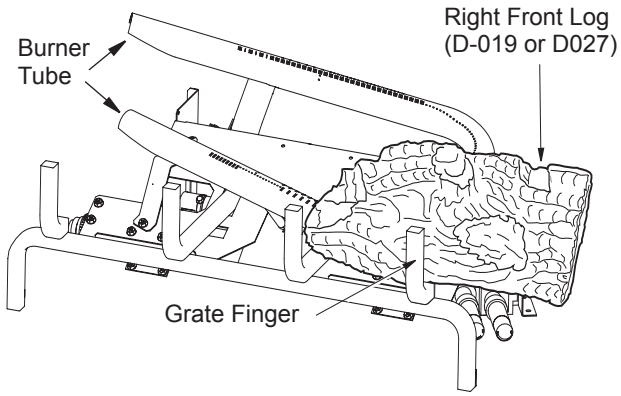

Figure 18 - Installing Right Front Log

INSTALLING LOGS AND VOLCANIC STONE

⚠ WARNING: Failure to position the parts in accordance with these diagrams or failure to use only parts specifically approved with this appliance may result in property damage or personal injury.

⚠ CAUTION: After installation and periodically thereafter, check to ensure that no flame comes in contact with any log. With appliance set to Hi, check to see if flames contact any log. If so, reposition logs according to log installation instructions in this manual. Flames contacting logs will create soot.

LOG PLACEMENT

It is very important to install these logs exactly as instructed. Do not modify logs. Only use logs supplied with appliance.

NOTE: *Each log includes an identifying number cast in the log. Look at each log when placing them on the burner system to be certain it is correct.*

1. Find the right front log (LMF30GTA/B or LMF30MOA/B models: D-019, LMF36GTA/B or LMF36MOA/B models: D-027). See ***Figures 18***, ***18A, 18B, and 18C*** for reference. The log has a rectangular shape on the bottom that fits against the lip on the black metal base, the square grate, and the round tube burner. Slide the log in place as shown in Figures.

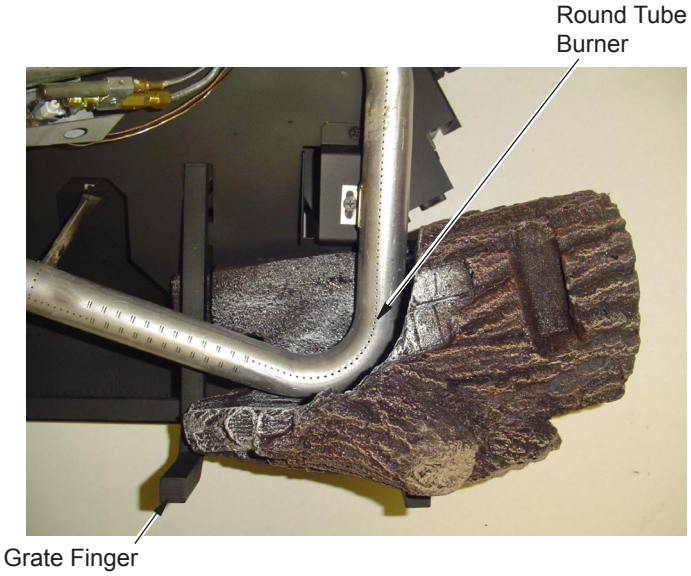

Figure 18A - Installing Right Front Log, Top View

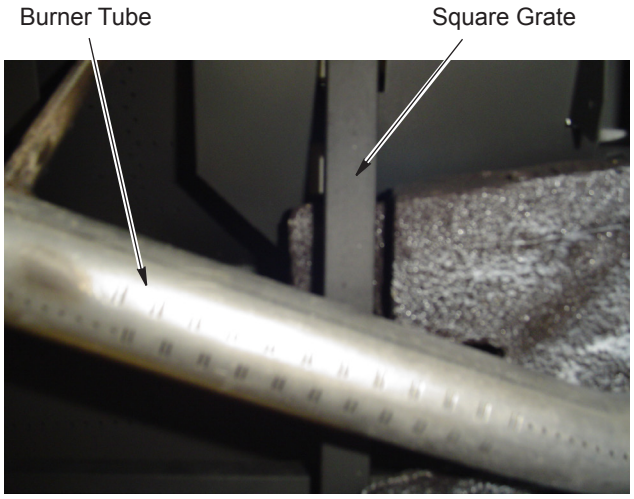

Figure 18B - Installing Right Front Log, Top View

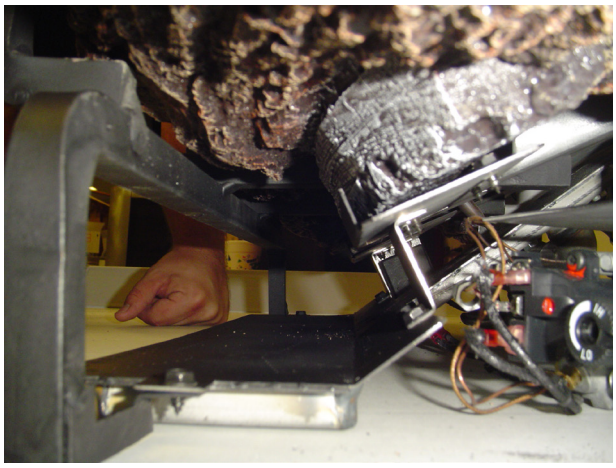

Figure 18C - Installing Right Front Log, Side View

2. Find the back left log (LMF30GTA/B or LMF30MOA/B models: D-018, LMF36GTA/B or LMF36MOA/B models: D-026). See ***Figures 19, 19A, and 19B***. ***Figure 19A*** shows how the log must fit against the end of the burner. ***Figure 19B*** shows how the notch in log fits against the vertical portion of the burner tube. Place this log on the base assembly by inserting it from the left side as shown in ***Figure 19***. You will need to twist the log slightly to get it to fit against the burners properly. It will rest even with the back edge of the pan.

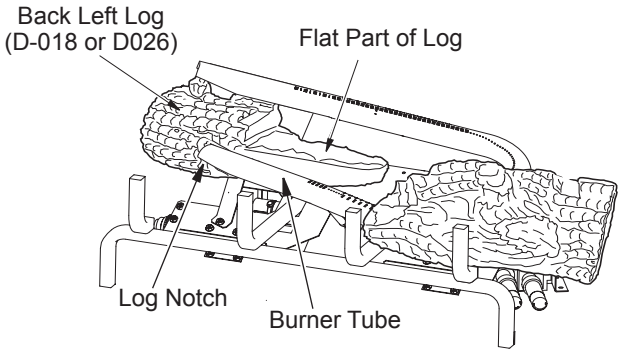

Figure 19 - Installing Back Left Log

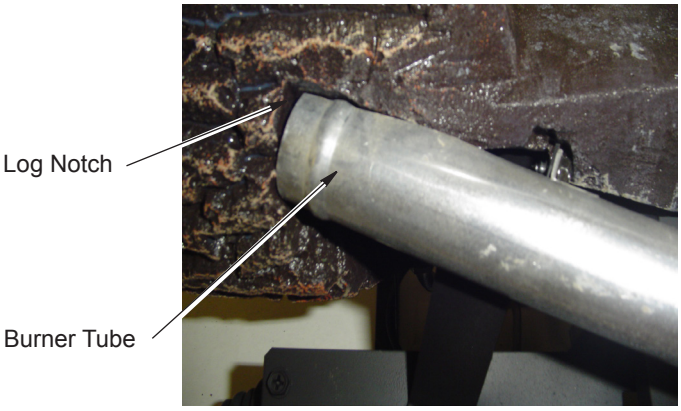

Figure 19A - Installing Back Left Log

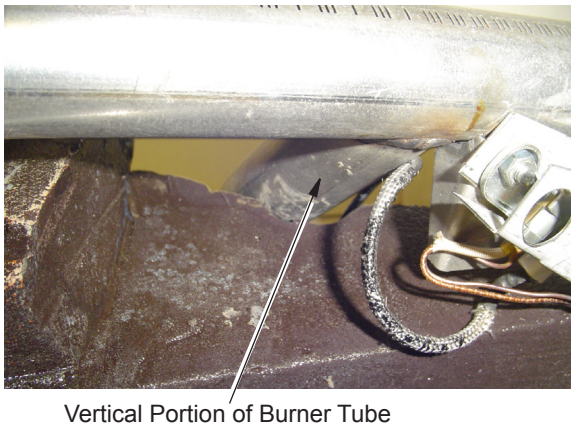

Figure 19B - Installing Back Left Log (D-018) Rear View

3. Find the front left log (LMF30GTA/B or LMF30MOA/B models: D-017, LMF36GTA/B or LMF36MOA/B models: D-025). See ***Figures 20, 20A, and 20B***. The log has a rectangular stand off on the bottom that fits against the lip on the black metal base as shown in ***Figure 20A, Page 12***. The bottom of this log has a slot that fits over the second bar on the grate as shown in ***Figure 20B***, ***Page 13***. Place the log on the base assembly as shown in figures.

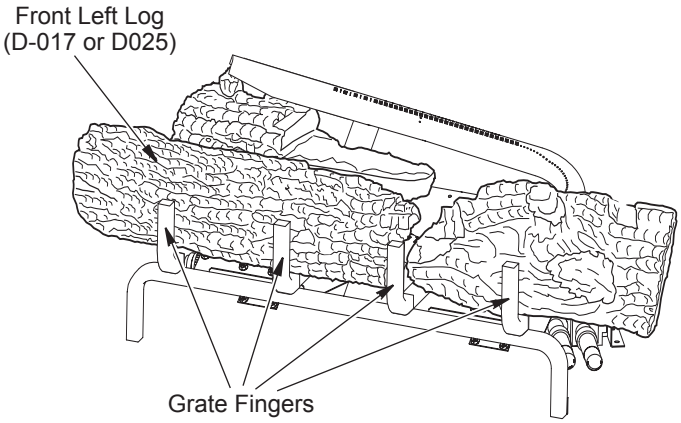

Figure 20 - Installing Front Left Log

Figure 20A - Installing Front Left Log Side View

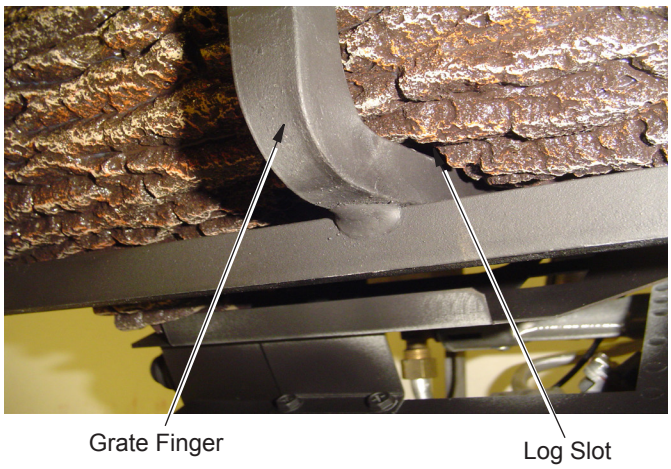

Figure 20B - Installing Front Left Log

4. Find the charred log (D-020). See ***Figures 21, 21A, and 21B***. The log has a slot in the bottom that fits over the square grate and rests against the burner tube as shown in ***Figure 21***. Place this log on the base as shown in figures.

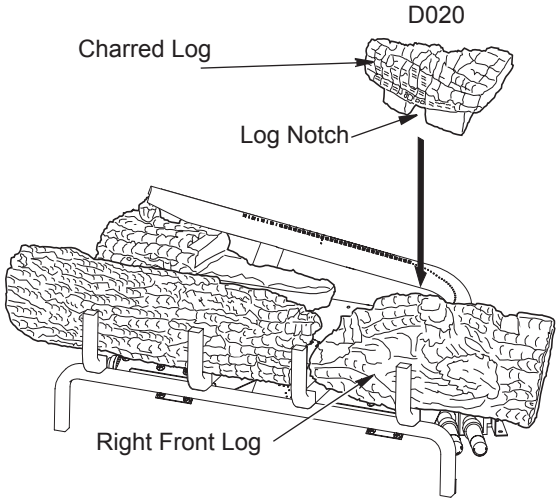

Figure 21 - Installing Charred Log

Figure 21A - Installing Charred Log Top View

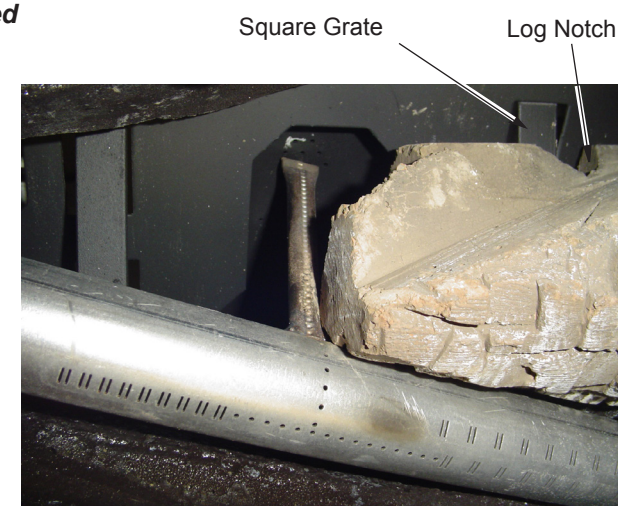

Figure 21B - Installing Charred Log Top Side View

5. Find the middle split log (LMF30GTA/B or LMF30MOA/B models: D-021, LMF36GTA/B or LMF36MOA/B models: D-028). See ***Figures 22 and 22A***. The split side of the log faces forward. The log has a notch that fits around the burner tube on the right side. The left side of the burner tube fits into the notch on the back side of this log. The log is placed properly when it sits parallel to the tube burner and the square peg is pointing up. See figures for reference.

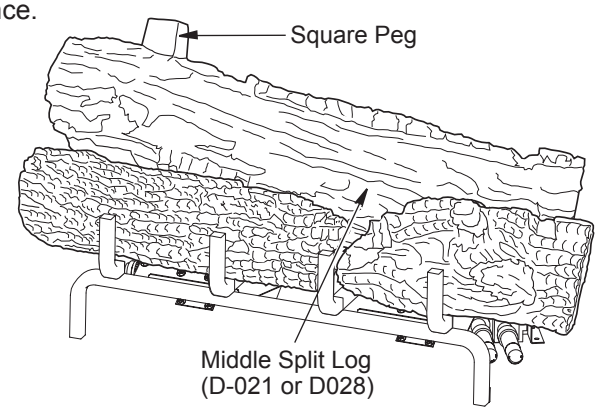

Figure 22 - Installing Middle Split Log (D-021)

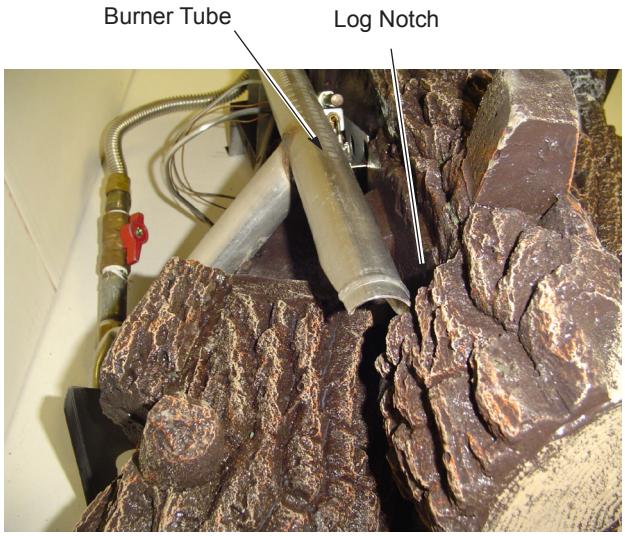

Figure 22A - Installing Middle Split Log Rear Top Side View

6. Find the right split crossover log (D-022) The bottom of the log has a rectangular stand off that fits in the slots on the right side of the front right log and the middle split log. Place this log as shown in ***Figure 23***.

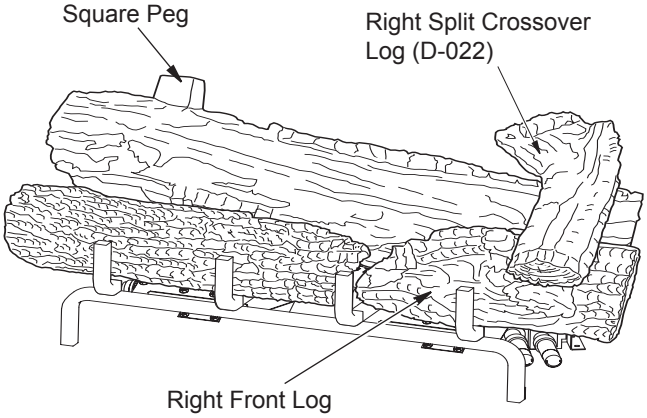

Figure 23 - Installing Right Split Crossover Log

7. For GTA/GTB logs, find the front top log (D-024). See ***Figure 24***. The left end of this log has a square hole that fits over a square peg that is on the top of the middle split log. The right end of this log rests behind the knot on the top of the front right log.

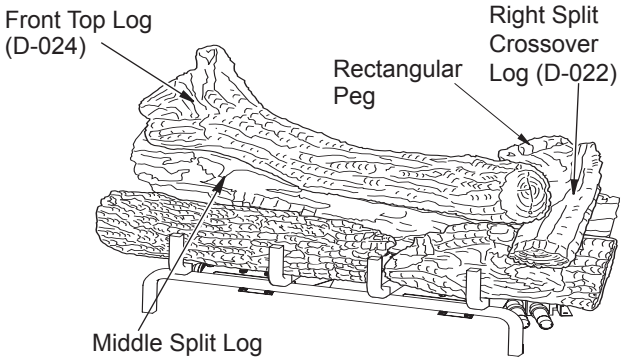

Figure 24 - Installing Front Top Log

8. Find the back top log (LMF30GTA/B or LMF30MOA/B models: D-023, LMF36GTA/B or LMF36MOA/B models: D-029).See ***Figures 25, and 25A***. The left end of this log has a round hole that fits over the round peg that is on the top of the back left log. The right end of this log has a rectangular hole that fits over the rectangular peg on the top of the right crossover log.

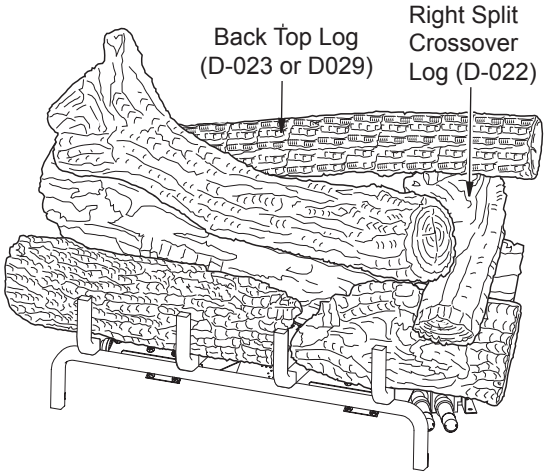

Figure 25 - Installing Back Top Log and Final Assembly

Figure 25A - Installing Back Top Log, Top View

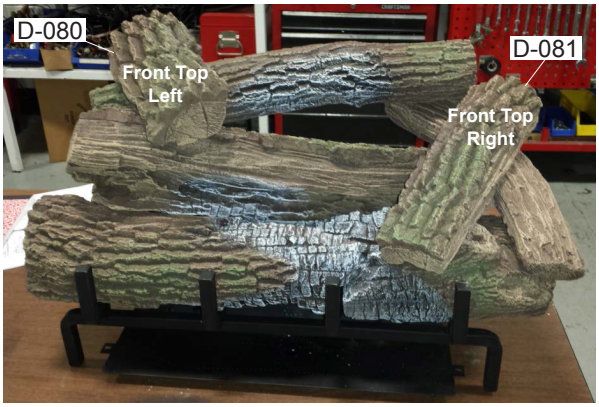

Figure 25B - Installing Small Left Hand And Right Hand Logs

For MOA/B logs only, follow steps 9 and 10.

9. Install the small Left Top Log D080 as shown in ***Figure 25B*** by mating the rectangular peg and notch.
10. Install the small Right Top Log D081 as shown in ***Figure 25B***.

VOLCANIC STONE PLACEMENT

Place Volcanic Stone around the base of the burner assembly on the fireplace floor to simulate an ash bed. Do not place Volcanic Stone or any other material on the burner.

FOR YOUR SAFETY READ BEFORE LIGHTING

⚠WARNING: If you do not follow these instructions exactly, a fire or explosion may result causing property damage, personal injury or loss of life.

A. This appliance has a pilot which must be lighted with a piezo igniter. When lightning the pilot, follow these instructions exactly.

B. BEFORE LIGHTING smell all around the appliance area for gas. Be sure to smell next to the floor because some gas is heavier than air and will settle on the floor.

WHAT TO DO IF YOU SMELL GAS

- **Do not try to light any appliance.**
- **Do not touch any electric switch; do not use any phone in your building.**
- **Immediately call your gas supplier from a neighbor's phone. Follow the gas supplier's instructions.**
- **If you cannot reach your gas supplier, call the fire department.**

C. Use only your hand to push in or turn gas control knob. Never use tools. If the knob will not push in or turn by hand, do not try to repair it, call a qualified technician. Force or attempted repair may result in a fire.

D. Do not use this appliance if any part has been under water. Immediately call a qualified service technician to inspect the appliance and to replace any part of the control system and any gas control which has been under water.

LIGHTING INSTRUCTIONS

1. STOP! Read the safety information, above.
2. Make sure switch is in the OFF position.
3. Be sure gas line shut-off valve is OPEN.
4. Press in and turn control knob clockwise to the OFF position *(see **Figure 26**)*.
   ***NOTE**: Knob cannot be turned from PILOT to OFF unless knob is pushed in slightly. DO NOT FORCE.*
5. Wait five (5) minutes to clear out any gas. If you then smell gas, STOP! Follow "B" in the safety information in column 1. If you don't smell gas, go on the next step.
6. Press in and turn control knob counterclockwise to the PILOT position. Press in control knob for five (5) seconds *(see **Figure 26**)*.
7. With control knob pressed in, press and release igniter button. This will light pilot. If needed, keep pressing igniter button until pilot lights.
   ***NOTE**: If pilot does not stay lit, contact a qualified service person or gas supplier for repairs.*
8. Keep control knob pressed in for 30 seconds after lighting pilot. After 30 seconds, release control knob.
   - If control knob does not pop out when released, turn off gas supply and contact a qualified service person or gas supplier for repairs.

   ***NOTE**: If pilot goes out, repeat steps 4 through 8.*
9. Slightly push in and turn control knob counterclockwise to the ON position.
10. Wait one minute and move switch to the ON position to light burner.
    ***NOTE**: AUTO is only functional when using optional remote control accessory.*
11. Set flame adjustment knob to any level between HI and LO.

TO TURN OFF GAS TO APPLIANCE

1. Turn control knob clockwise to the OFF position.

2a. Set switch in the OFF position.

2b. **If Using Optional Hand-Held Remote:** Set selector switch in the OFF position to prevent draining battery.

3. Close equipment shutoff valve *(see **Figure 13, Page 9**)*.

MANUAL LIGHTING PROCEDURE

1. Follow steps 1 through 6 under *Lighting Instructions*.
2. Press control knob and light pilot with match.
3. Keep control knob pressed in for 30 seconds after lighting pilot. After 30 seconds, release control knob. Now follow steps 9 through 11, under *Lighting Instructions*.

OPTIONAL HAND-HELD REMOTE OPERATION

***NOTE**: All remote control accessories must be purchased separately (see Accessories, **Page 23**). Follow instructions included with the remote control.*

NOTICE: You must light the pilot before using the hand-held remote control unit. See *Lighting Instructions*.

After lighting, let pilot flame burn for about one minute. Turn control knob to ON position. Adjust flame adjustment knob anywhere between HI and LO. Slide the selector switch to the REMOTE position *(see **Figure 26**)*.

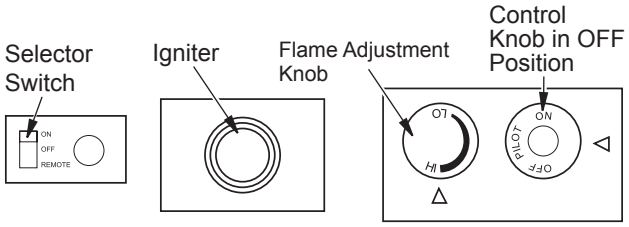

Figure 26 - Control Knob, Igniter Button and Remote Selector Switch

***NOTE**: The burner may light if hand-held remote was on when selector switch was last turned off. You can now turn burner on and off with hand-held remote control unit.*

***IMPORTANT**:* Do not leave selector switch in the REMOTE or ON position when pilot is not lit. This will drain the battery.

INSPECTING BURNERS

Check pilot flame pattern and burner flame patterns often.

PILOT ASSEMBLY

The pilot assembly is factory preset for the proper flame height. Alterations may have occurred during shipping and handling. Call a qualified service person to readjust the pilot if necessary.

The height of the thermopile must be 3/8" to 1/2" above the pilot flame as shown in ***Figure 27***. The thermocouple must be at a height of about 1/8" above the pilot flame. The flame from the pilot burner must extend beyond both the thermocouple and thermopile.

If your pilot assembly does not meet these requirements:

- turn fireplace off *(see To Turn Off Gas to Appliance, **Page 15**)*
- see *Troubleshooting*, ***Page 19***

BURNER FLAME PATTERN

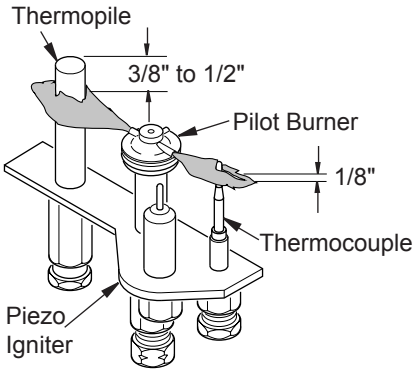

Figure 27 - Pilot Assembly

Figure 28 shows correct burner flame pattern.

NOTICE: Do not mistake orange flames with yellow tipping. Dirt or other fine particles are burned by appliance, causing brief patches of orange flame.

If burner flame pattern is incorrect, as shown in ***Figure 29***.

- turn appliance off *(see To Turn Off Gas to Appliance, **Page 15**)*
- see *Troubleshooting*, ***Page 19***

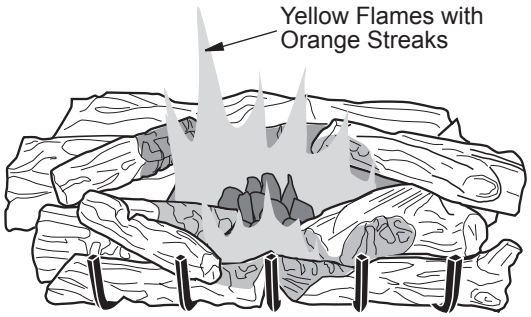

Figure 28 - Correct Burner Flame Pattern

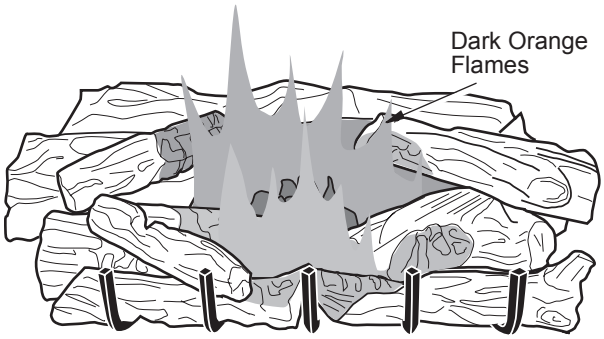

Figure 29 - Incorrect Burner Flame Pattern

CLEANING AND MAINTENANCE

⚠ WARNING: Turn off appliance and let cool before cleaning.

⚠ CAUTION: You must keep control areas, burners and circulating air passageways of appliance clean. Inspect these areas of appliance before each use. Have appliance inspected yearly by a qualified service person.

⚠ WARNING: Failure to keep the primary air opening(s) of the burner(s) clean may result in sooting and property damage.

BURNER INJECTOR HOLDER AND PILOT AIR INLET HOLE

The primary air inlet holes allow the proper amount of air to mix with the gas. This provides a clean burning flame. Keep these holes clear of dust, dirt, lint and pet hair. Clean these air inlet holes prior to each heating season. Blocked air holes will create soot. We recommend that you clean the unit every three months during operation and have appliance inspected yearly by a qualified service person.

We also recommend that you keep the burner tube and pilot assembly clean and free of dust and dirt. To clean these parts we recommend using compressed air no greater than 30 PSI. Your local computer store, hardware store or home center may carry compressed air in a can. If using compressed air in a can, please follow the directions on the can. If you don't follow directions on the can, you could damage the pilot assembly.

1. Shut off unit, including pilot. Allow unit to cool for at least thirty minutes.
2. Inspect burner, pilot and primary air inlet holes on injector holder for dust and dirt *(see **Figure 30, Page 17**)*.
3. Blow air through the ports/slots and holes in the burner.
4. Check injector holder located at end of burner tube again. Remove any large particles of dust, dirt, lint or pet hair with a soft cloth or vacuum cleaner nozzle.
5. Blow air into the primary air holes on the injector holder.

6. In case any large clumps of dust have now been pushed into the burner repeat steps 3 and 4.

Clean pilot assembly also. Additional cleaning may be needed for proper pilot operation based on use/lack of use. A yellow tip on the pilot flame may indicate dust and dirt in the pilot assembly. There is a small pilot air inlet hole about from where the pilot flame comes out of pilot assembly *(see **Figure 31**)*. With unit off, lightly blow air through air inlet hole. You may blow through a drinking straw if compressed air is not available.

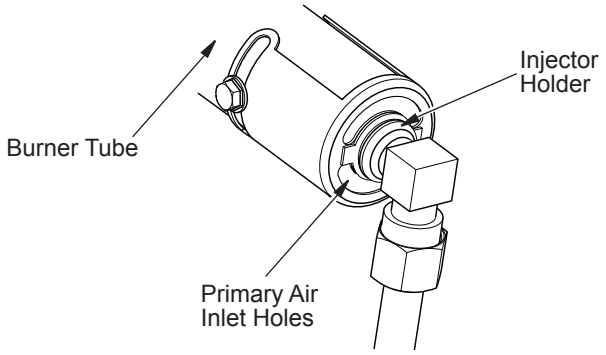

Figure 30 - Injector Holder On Outlet Burner Tube

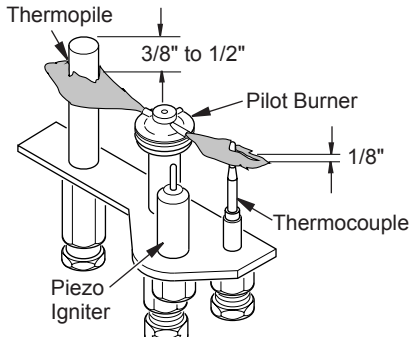

Figure 31 - Pilot Inlet Air Hole (Your pilot may vary from pilot shown)

LOGS

- If you remove logs for cleaning, refer to *Installing Logs and Volcanic Stone*, ***Page 11***, to properly replace logs.
- Replace log(s) if broken or chipped (dime-sized or larger).

MAIN BURNER

Periodically inspect all burner flame holes with appliance running. All slotted burner flame holes should be open with flame present. All round burner flame holes should be open with a small blue flame present. Some burner flame holes may become blocked by debris or rust, with no flame present. If so, turn off appliance and let cool. Remove blockage, blocked burner flame holes will create soot.

⚠ WARNING: The injector holders (air shutters) are not adjustable. Do not move injector holders from their original positions.

At least once a year, the vent system for the fireplace in which this appliance is installed shall be inspected, cleaned, and repaired as necessary by a qualified service person.

SPECIFICATIONS

MNF30ONM

- Rating (Variable): 29,000/40,000 Btu/Hr
- Type Gas: Natural
- Ignition: Electronic
- Manifold Pressure: 3.4" W.C.
- Inlet Gas Pressure (in. of water): Max - 10.5" W.C., Min* - 5" W.C.

*For purpose of input adjustment

MNF30OPM

- Rating (Variable): 29,000/40,000 Btu/Hr
- Type Gas: Propane/LP
- Ignition: Electronic
- Manifold Pressure: 7.9" W.C.
- Inlet Gas Pressure (in. of water): Max - 14" W.C., Min* - 11" W.C.

*For purpose of input adjustment

WIRING DIAGRAM (REMOTE READY MODELS)

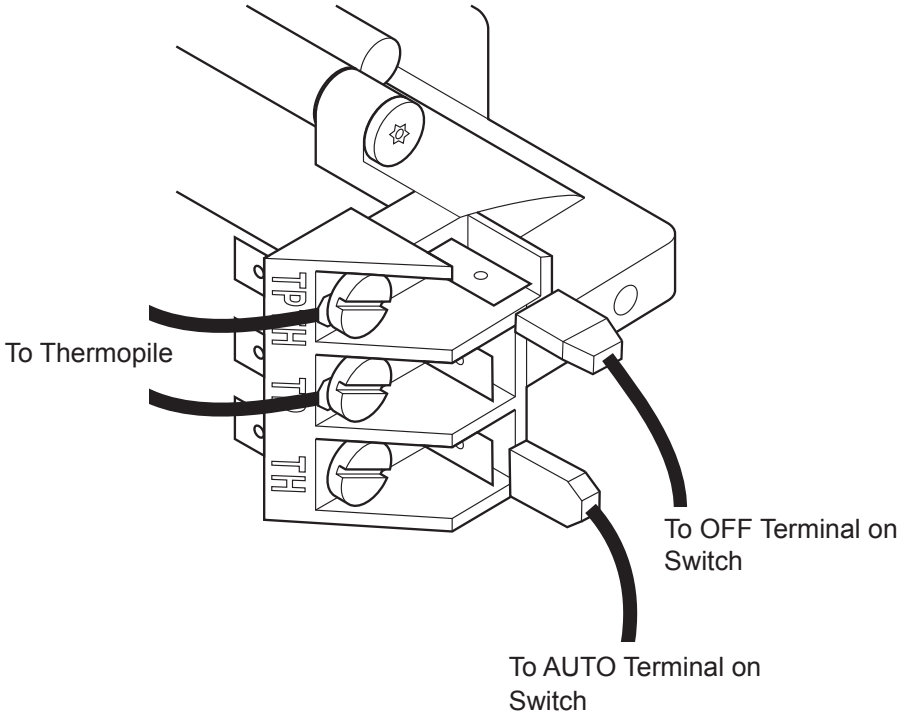

TROUBLESHOOTING

⚠ WARNING: Turn off appliance and let cool before servicing. Only a qualified service person should service and repair appliance.

***NOTE**: All troubleshooting items are listed in order of operation.*

OBSERVED PROBLEM	POSSIBLE CAUSE	REMEDY
When igniter button is pressed, there is no spark at ODS/pilot	1. Igniter electrode not connected to igniter cable	1. Reconnect igniter cable
	2. Igniter cable pinched or wet	2. Free igniter cable if pinched by any metal or tubing. Keep igniter cable dry
	3. Broken igniter cable	3. Replace igniter cable
	4. Bad igniter	4. Replace igniter
	5. Igniter electrode positioned wrong	5. Replace pilot assembly
	6. Igniter electrode broken	6. Replace pilot assembly
	7. Battery not installed, battery power low or battery not installed correctly (electronic ignition models only)	7. Install new alkaline battery in electronic igniter. Verify battery is installed correctly
When igniter button is pressed, there is spark at ODS/pilot but no ignition	1. Gas supply turned off or equipment shutoff valve closed	1. Turn on gas supply or open equipment shutoff valve
	2. Control knob not in PILOT position	2. Turn control knob to PILOT position
	3. Control knob not pressed in while in PILOT position	3. Press in control knob while in PILOT position
	4. Air in gas lines when installed	4. Continue holding down control knob. Repeat igniting operation until air is removed
	5. Depleted gas supply (propane/LP only)	5. Contact local propane/LP gas company
	6. ODS/pilot is clogged	6. Clean ODS/pilot *(see Cleaning and Maintenance, **Page 16**)* or replace ODS/pilot assembly
	7. Gas regulator setting is not correct	7. Replace gas regulator

TROUBLESHOOTING
Continued

OBSERVED PROBLEM	POSSIBLE CAUSE	REMEDY
ODS/pilot lights but flame goes out when control knob is released	1. Control knob not fully pressed in 2. Control knob not pressed in long enough 3. Safety interlock system has been triggered 4. Equipment shutoff valve not fully open 5. Pilot flame not touching thermocouple, which allows thermocouple to cool, causing pilot flame to go out. This problem could be caused by one or both of the following: A) Low gas pressure B) Dirty or partially clogged ODS/pilot 6. Thermocouple connection loose at control valve 7. Thermocouple damaged 8. Control valve damaged	1. Press in control knob fully 2. After ODS/pilot lights, keep control knob pressed in 30 seconds 3. Wait one minute for safety interlock system to reset. Repeat ignition operation 4. Fully open equipment shutoff valve 5. A) Contact local natural or propane/LP gas company 5 B) Clean ODS/pilot *(see Cleaning and Maintenance, **Page 16**)* or replace ODS/pilot assembly 6. Hand tighten until snug, then tighten 1/4 turn more 7. Replace pilot assembly 8. Replace control valve
Burner does not light after pilot is lit	1. Inlet gas pressure is too low 2. Burner orifice(s) clogged 3. Thermopile leads disconnected or improperly connected. 4. Remote selector in OFF position 5. Wire disconnected from gas control	1. Contact local natural or propane/LP gas company 2. Clean burner *(see Cleaning and Maintenance, **Page 16**)* or replace burner orifice(s) 3. Reconnect leads see *wiring diagram, **Page 18*** 4. Put remote selector in ON position 5. See *Wiring Diagram*, ***Page 18***
Delayed ignition of burner	1. Manifold pressure is too low 2. Burner orifice clogged 3. Mislocated crossover tube	1. Contact local natural or propane/LP gas company 2. Clean burner *(see Cleaning and Maintenance, **Page 16**)* or replace burner orifice(s) 3. Contact qualified service person
Burner backfiring during combustion	1. Burner orifice is clogged or damaged 2. Damaged burner 3. Gas regulator defective	1. Clean burner *(see Cleaning and Maintenance, **Page 16**)* or replace burner orifice 2. Replace damaged burner 3. Replace gas regulator

TROUBLESHOOTING
Continued

OBSERVED PROBLEM	POSSIBLE CAUSE	REMEDY
Slight smoke or odor during initial operation	1. Residues from manufacturing processes and logs curing	1. Problem will stop after a few hours of operation
Appliance produces a whistling noise when burners are lit	1. Turning control knob to HI position when burners are cold 2. Air in gas line 3. Air passageways on appliance blocked 4. Dirty or partially clogged burner orifice.	1. Turn control knob to LO position and let warm up for a minute 2. Operate burners until air is removed from line. Have gas line checked by local natural or propane/LP gas company 3. Observe minimum installation clearances *(see **Pages 4-6**)* 4. Clean burner *(see Cleaning and Maintenance, **Page 16**)* or replace burner orifice(s)
White powder residue forming within burner box or on adjacent walls or furniture	1. When heated, vapors from furniture polish, wax, carpet cleaners, etc. may turn into white powder residue	1. Turn appliance off when using furniture polish, wax, carpet cleaners or similar products
Remote does not function	1. Battery is not installed. Battery power is low	1. Replace 9-volt batteries in receiver and hand-held remote
Appliance produces a clicking/ticking noise just after burners are lit or shut off	1. Metal expanding while heating or contracting while cooling 2. Wire connection loose or wire broken	1. This is normal with most appliances. If noise is excessive, contact qualified service person 2. Check wiring connections *(see wiring diagram, **Page 18**)*. Replace wire harness if necessary.

⚠ WARNING: If you smell gas
- **Shut off gas supply.**
- **Do not try to light any appliance.**
- **Do not touch any electrical switch; do not use any phone in your building.**
- **Immediately call your gas supplier from a neighbor's phone. Follow the gas supplier's instructions.**
- **If you cannot reach your gas supplier, call the fire department.**

IMPORTANT: Operating appliance where impurities in air exist may create odors. Cleaning supplies, paint, paint remover, cigarette smoke, cements and glues, new carpet or textiles, etc., create fumes. These fumes may mix with combustion air and create odors. These odors will disappear over time.

OBSERVED PROBLEM	POSSIBLE CAUSE	REMEDY
Appliance produces unwanted odors	1. Appliance burning vapors from paint, hair spray, glues, cleaners, chemicals, new carpet, etc. (See *IMPORTANT* statement above) 2. Low fuel supply (propane/LP only) 3. Gas leak. **See Warning statement at top of page**	1. Open window to ventilate room. Stop using odor causing products while appliance is running 2. Refill supply tank (propane/LP only) 3. Locate and correct all leaks *(see Checking Gas Connections, **Page 9**)*
Appliance shuts off in use (pilot operates)	1. Low line pressure 2. ODS/pilot is partially clogged	1. Contact local natural or propane/LP gas company 2. Clean ODS/pilot *(see Cleaning and Maintenance, **Page 16**)*
Gas odor even when control knob is in OFF position	1. Gas leak. **See Warning statement at top of page** 2. Control valve or gas control defective	1. Locate and correct all leaks *(see Checking Gas Connections, **Page 9**)* 2. Replace control valve or gas control
Gas odor during combustion	1. Foreign matter between control valve and burner 2. Gas leak. **See Warning statement at top of page**	1. Take apart gas tubing and remove foreign matter 2. Locate and correct all leaks *(see Checking Gas Connections, **Page 9**)*

ACCESSORIES

Purchase these appliance accessories from your local dealer. If they can not supply these accessories, contact IHP at SuperiorFireplaces.US.com for referral information. You can also write to the address listed on the back page of this manual.

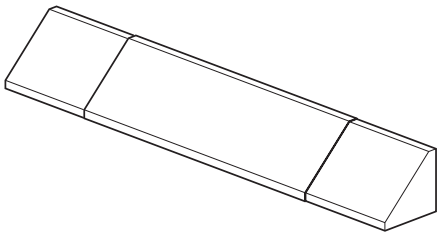

FIREPLACE HOOD, BLACK

Cat. No. F1764, Model GA6050

For all models. Helps deflect heat away from mantel or wall above fireplace. Fits openings 28" to 48" wide.

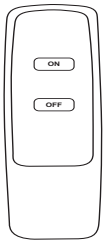

RECEIVER AND HAND-HELD REMOTE CONTROL KIT - MRC (REMOTE READY MODELS ONLY)

Cat No. F1077, Model MRC

For all models. Allows the fireplace to be turned on and off by using a hand-held remote control.

WALL-MOUNT ON/OFF SWITCH (REMOTE READY MODELS ONLY)
Cat No. F0245, Model GWMS2

For all models. Allows the gas log appliance to be turned on and off with a wall switch.

DAMPER CLAMP
Cat No. F1760, Model GA6080
For all models. Permanently opens chimney flue damper for vented operation.

VOLCANIC STONE

Cat. No. 80L42, Model FDVS
For all models. Order when additional volcanic stone is desired.

ACCESSORY LOG KIT
Cat. No. F0252, Model LAMF

MAGNIFLAME EMBER BURNER KIT (optional)
Cat No. F0253, Model MFEB
For wood burning fireplace.

PARTS
REMOTE-READY CONTROL MODELS
MNF30ONM and MNF30OPM

Cat. No.	Model
F2128	MNF30ONM
F2130	MNF30OPM

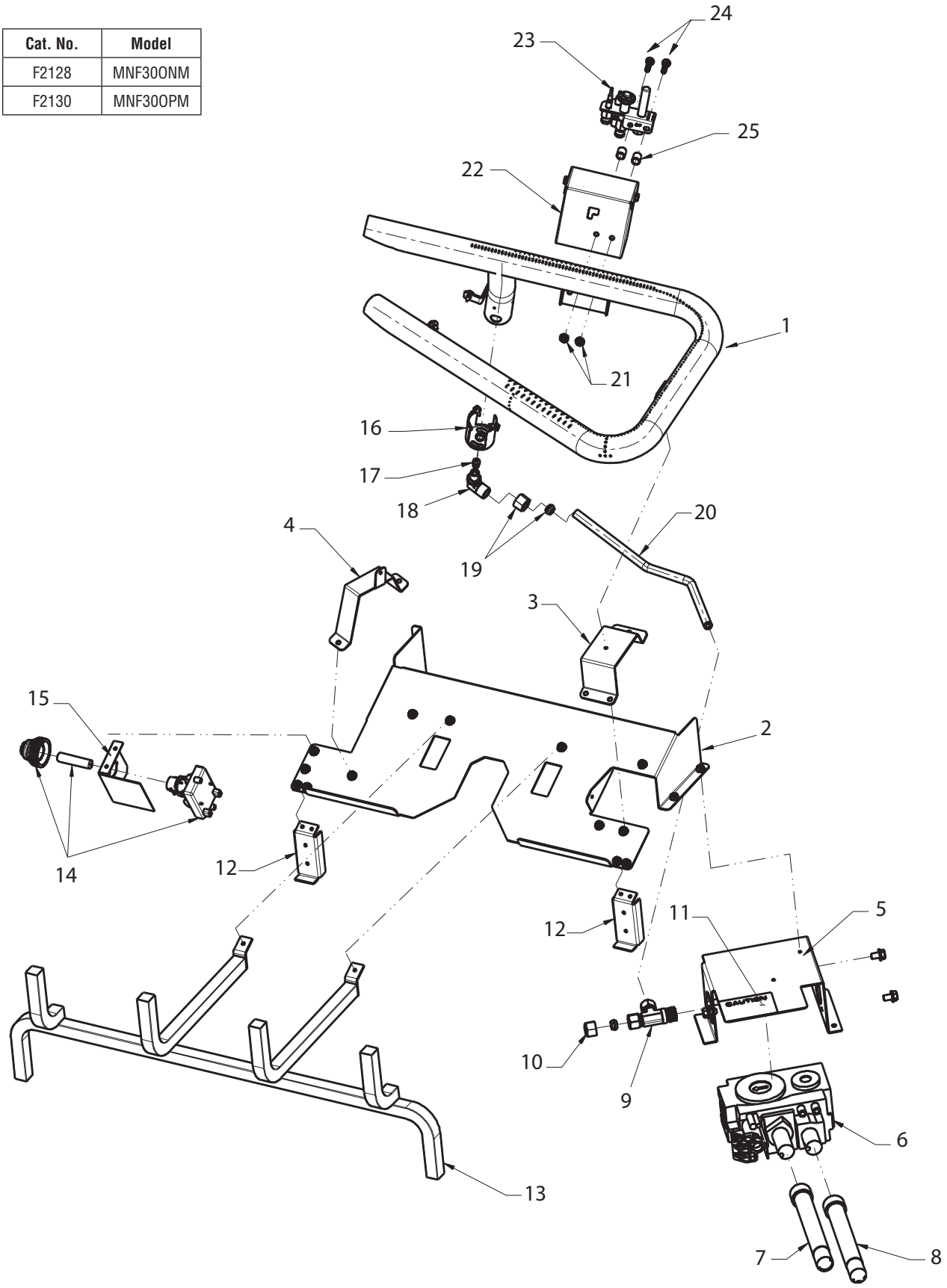

PARTS

REMOTE-READY MODELS MNF30ONM and MNF30OPM

This list contains replaceable parts used in your appliance. When ordering parts, follow the instructions listed under Replacement Parts on ***Page 28*** of this manual.

⚠ WARNING: Contact an IHP dealer to obtain any of these parts. Never use substitute materials not approved by IHP. Use of non-approved parts can result in poor performance and safety hazards.

KEY NO.	CAT. NO.	DESCRIPTION	MNF30ONM	MNF30OPM	QTY.
1	J6356	Burner Stainless MF	•	•	1
2	J8234	Base	•	•	1
3	J8175	Bracket Right Burner	•	•	1
4	J8176	Bracket Left Burner	•	•	1
5	J8235	Bracket Remote Valve	•	•	1
6	J6830	Gas Valve, HI-LO (SIT) NG	•		1
	J6831	Gas Valve, HI-LO (SIT) LP		•	1
7	J3843	Knob Long Extension (HI-LO)	•	•	1
8	J3842	Knob long Extension (Pilot)	•	•	1
9	J4883	T - Fitting 3/8 Brass Tube	•	•	1
10	J8238	Cap 3/8 Compression	•	•	1
11	J8170	Decal, Caution Label	•	•	1
12	J8236	Leg, Outdoor Base	•	•	2
13	J6532	Grate Stainless MF42			1
	J8237	Grate Stainless MF48	•	•	1
14	J4596	Igniter, Electric	•	•	1
15	J6144	Bracket, Igniter	•	•	1
16	J5198	Shutter, Air NG	•		1
	J5199	Shutter, Air LP		•	1
17	J3604	Orifice, 0.12 NG	•		1
	J3615	Orifice, 0.07 LP		•	1
18	J6127	Orifice Holder, 90 Degrees	•	•	1
19	J4733	Nut and Sleeve, Brass Compression	•	•	1
20	J4711	Tube, Flex 3/8 X 15"	•	•	1
21	J8172	Nut, 10-24 Black Hex	•	•	2
22	J8239	Shield, Pilot	•	•	1
23	J4117	Pilot NG # 51	•		1
	J4118	Pilot LP # 30		•	1
24	J8173	Screw Black Pan Head PH 10-24 X .75	•	•	2
25	J5918	Spacer, .4375 Aluminum	•	•	2

This list contains replaceable parts used in your appliance. When ordering parts, follow the instructions listed under *Replacement Parts* below.

PARTS AVAILABLE, NOT SHOWN - ALL MODELS

J3664	Caution Decal	1
J3689	Hardware Kit	1
80L42	Volcanic Stone	1
J5519	Flextube with Fitting	1
J3656	Fan Switch	1

PARTS

LOG SET MODELS LMF30GTA/B, AND LMF36GTA/B

This list contains replaceable parts used in your appliance. When ordering parts, follow the instructions listed under *Replacement Parts* on ***Page 28*** of this manual.

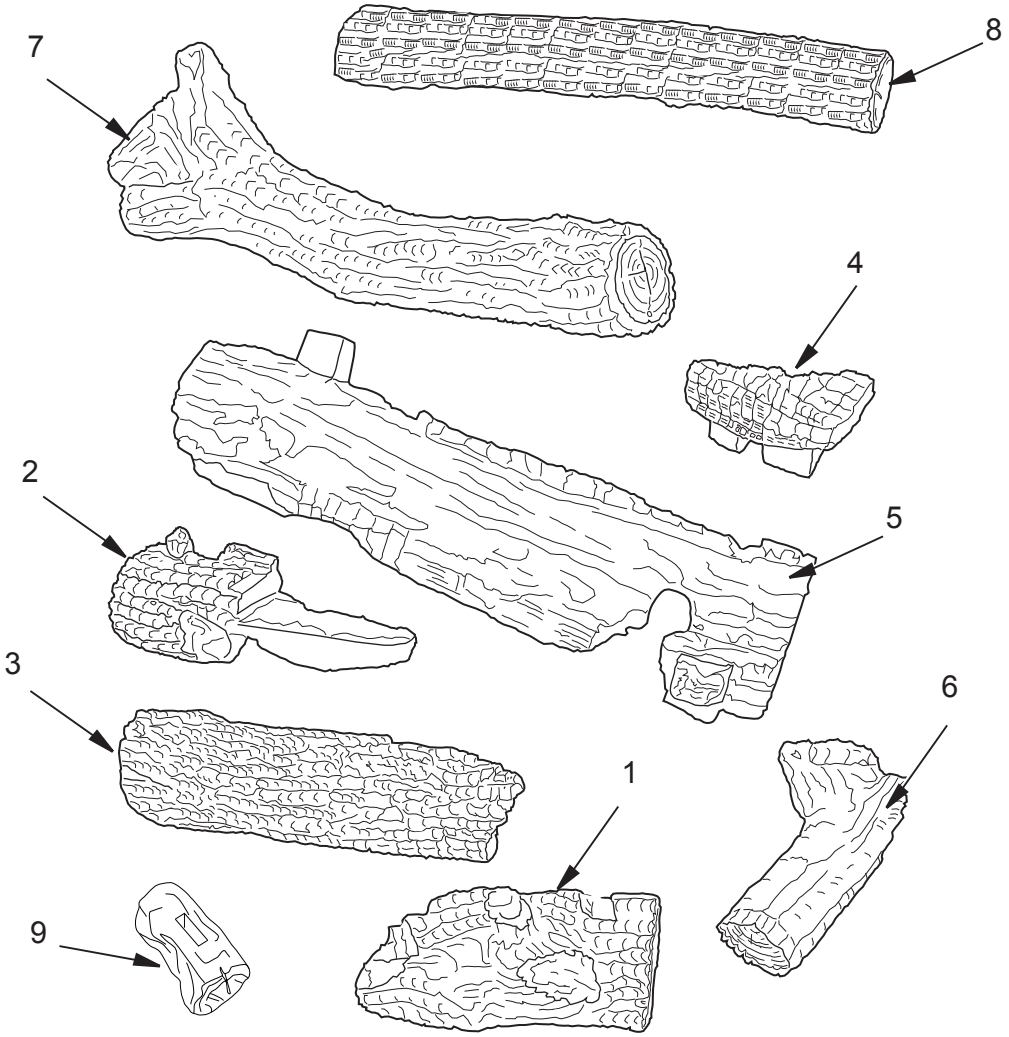

KEY NO.	LMF30GTA/B CAT. NO.	LMF30GTA/B Log Id. #	LMF36GTA/B CAT. NO.	LMF36GTA/B Log Id. #	DESCRIPTION	QTY.
1	J6516	D-019	J6527	D-027	Log, Front Right	1
2	J6517	D-018	J6528	D-026	Log, Back Left	1
3	J6518	D-017	J6529	D-025	Log, Front Left	1
4	J6519	D-020	J6519	D-020	Log, Charred	1
5	J6520	D-021	J6530	D-028	Log, Middle Split	1
6	J6521	D-022	J6521	D-022	Log, Right Split Crossover	1
7	J6522	D-024	J6522	D-024	Log, Front Top	1
8	J6523	D-023	J6531	D-029	Log, Back Top	1
9	J6496	None	J6496	None	Log Switch	1

Each log includes a reference number. The first number indicates the order it is placed on the burner assembly. The next two numbers indicate the set size.

LOG SET MODELS
LMF30MOA/B, AND LMF36MOA/B

This list contains replaceable parts used in your appliance. When ordering parts, follow the instructions listed under Replacement Parts on ***Page 28*** of this manual.

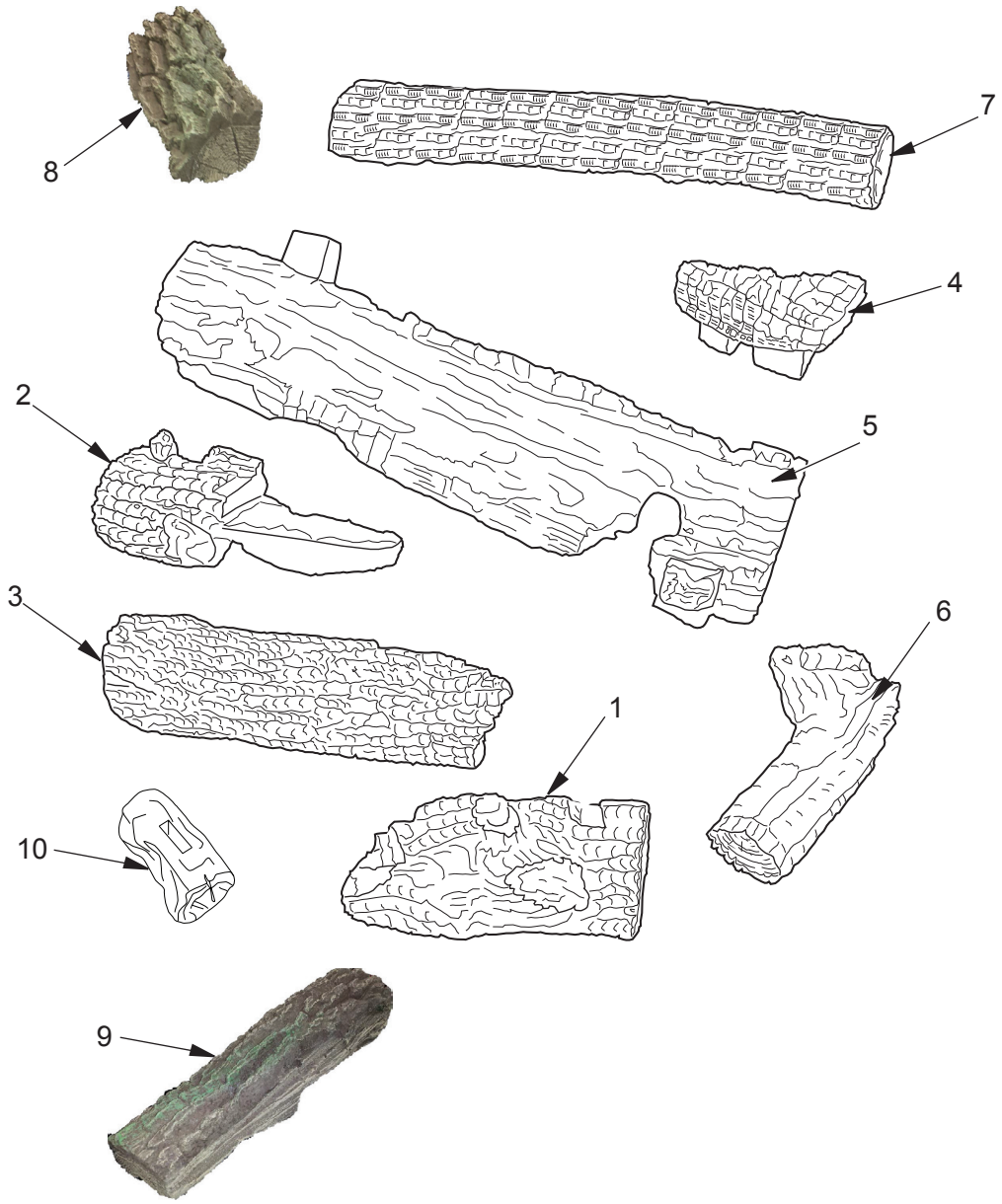

KEY NO.	LMF30MOA/B CAT. NO.	LMF30MOA/B Log Id. #	LMF36MOA/B CAT. NO.	LMF36MOA/B Log Id. #	DESCRIPTION	QTY.
1	J8253	D-019	J8259	D-027	Log, Front Right	1
2	J8254	D-018	J8260	D-026	Log, Back Left	1
3	J8255	D-017	J8261	D-025	Log, Front Left	1
4	J6519	D-020	J6519	D-020	Log, Charred	1
5	J8256	D-021	J8262	D-028	Log, Middle Split	1
6	J8257	D-022	J8263	D-022	Log, Right Split Crossover	1
7	J8258	D-023	J8264	D-029	Log, Back Top	1
8	J8251	D-080	J8251	D-080	Log, Top Left	1
9	J8252	D-081	J8252	D-081	Log, Top Right	1
10	F2676	None	F2676	None	Log Switch	1

Each log includes a reference number. The first number indicates the order it is placed on the burner assembly. The next two numbers indicate the set size.

REPLACEMENT PARTS

See ***Pages 24-27*** for a complete replacement parts list. Use only parts supplied from the manufacturer.

Normally, all parts should be ordered through your IHP distributor or dealer. Parts will be shipped at prevailing prices at time of order.

When ordering repair parts, always give the following information:

1. The model number of the appliance.
2. The serial number of the appliance.
3. The part number.
4. The description of the part.
5. The quantity required.
6. The installation date of the appliance.

If you encounter any problems or have any questions concerning the installation or application of this appliance, please contact your dealer.

SERVICE HINTS

When Gas Pressure Is Too Low

- pilot will not stay lit
- burners will have delayed ignition
- heater will not produce specified heat
- propane/LP gas supply may be low

You may feel your gas pressure is too low. If so, contact your local propane/LP or natural gas supplier.

TECHNICAL SERVICE

You may have further questions about installation, operation, or troubleshooting. Please contact your IHP dealer for any questions or concerns. When contacting your dealer please have your model and serial numbers of your appliance ready. You can also visit our web site at SuperiorFireplaces.us.com.

Innovative Hearth Products
Superior® Brand Gas Log Set
Limited Three Year Warranty

THE WARRANTY

Innovative Hearth Products Limited Three Year Warranty ("IHP") warrants your Superior® brand Gas Log Set ("Product") to be free from defects in materials and workmanship at the time of manufacture. The logs and grate carry the Limited Three Year Warranty. After installation, if covered components manufactured by IHP are found to be defective in materials or workmanship during the Limited Three Year Warranty period and while the Product remains at the site of the original installation, IHP will, at its option, repair or replace the covered components. If repair or replacement is not commercially practical, IHP will, at its option, refund the purchase price or wholesale price of the IHP product, whichever is applicable. IHP will also pay IHP prevailing labor rates, as determined in its sole discretion, incurred in repairing or replacing such components. THERE ARE EXCLUSIONS AND LIMITATIONS to this Limited Three Year Warranty as described herein.

COVERAGE COMMENCEMENT DATE

Warranty coverage begins on the date of purchase. In the case of new home construction, warranty coverage begins on the date of first occupancy of the dwelling or six months after the sale of the Product by an independent IHP dealer, whichever occurs earlier. The warranty shall commence no later than 24 months following the date of product shipment from IHP, regardless of the installation or occupancy date.

EXCLUSIONS AND LIMITATIONS

This Limited Three Year Warranty applies only if the Product is installed in the United States or Canada and only if operated and maintained in accordance with the printed instructions accompanying the Product and in compliance with all applicable installation and building codes and good trade practices.

This warranty is non-transferable and extends to the original owner only. The Product must be purchased through a listed supplier of IHP and proof of purchase must be provided. The following do not carry the Limited Three Year Warranty but are warranted as follows:

Gas components – Repair or replacement for one year from the date of installation.
Remote control – Repair or replacement for one year from the date of installation.
Labor coverage – Prevailing IHP labor rates apply for the warranty period of the component.

Parts not otherwise listed carry a 90 day warranty from the date of installation.

Whenever practicable, IHP will provide replacement parts, if available, for a period of 10 years from the last date of manufacture of the product.

IHP will not be responsible for: (a) damages caused by normal wear and tear, accident, riot, fire, flood or acts of God; (b) damages caused by abuse, negligence, misuse, or unauthorized alteration or repair of the Product affecting its stability or performance (The Product must be subjected to normal use. The Product is designed to burn either natural or propane gas only. Burning conventional fuels such as wood, coal or any other solid fuel will cause damage to the Product, will produce excessive temperatures and could result in a fire hazard.); (c) damages caused by failing to provide proper maintenance and service in accordance with the instructions provided with the Product; (d) damages, repairs or inefficiency resulting from faulty installation or application of the Product.

This Limited Three Year Warranty covers only parts and labor as provided herein. In no case shall IHP be responsible for materials, components or construction which are not manufactured or supplied by IHP or for the labor necessary to install, repair or remove such materials, components or construction. Additional utility bills incurred due to any malfunction or defect in equipment are not covered by this warranty. All replacement or repair components will be shipped F.O.B. from the nearest stocking IHP factory.

LIMITATION ON LIABILITY

It is expressly agreed and understood that IHP's sole obligation and the purchaser's exclusive remedy under this warranty, under any other warranty, expressed or implied, or in contract, tort or otherwise, shall be limited to replacement, repair, or refund, as specified herein.

In no event shall IHP be liable for any incidental or consequential damages caused by defects in the Product, whether such damage occurs or is discovered before or after replacement or repair, and whether such damage is caused by IHP's negligence. IHP has not made and does not make any representation or warranty of fitness for a particular use or purpose, and there is no implied condition of fitness for a particular use or purpose.

IHP makes no expressed warranties except as stated in this Limited Three Year Warranty. The duration of any implied warranty is limited to the duration of this expressed warranty.

No one is authorized to change this Limited Three Year Warranty or to create for IHP any other obligation or liability in connection with the Product. Some states and provinces do not allow the exclusion or limitation of incidental or consequential damages, so the above limitations or exclusions may not apply to you. The provisions of this Limited Three Year Warranty are in addition to and not a modification of or subtraction from any statutory warranties and other rights and remedies provided by law.

INVESTIGATION OF CLAIMS AGAINST WARRANTY

IHP reserves the right to investigate any and all claims against this Limited Three Year Warranty and to decide, in its sole discretion, upon the method of settlement.

To receive the benefits and advantages described in this Limited Three Year Warranty, the appliance must be installed and repaired by a licensed contractor approved by IHP.

Contact IHP at the address provided herein to obtain a listing of approved dealers/distributors. **IHP shall in no event be responsible for any warranty work done by a contractor that is not approved without first obtaining LHP's prior written consent.**

HOW TO REGISTER A CLAIM AGAINST WARRANTY

In order for any claim under this warranty to be valid, you must contact the IHP dealer/distributor from which you purchased the product. If you cannot locate the dealer/distributor, then you must notify IHP in writing. IHP must be notified of the claimed defect in writing within 90 days of the date of failure. Notices should be directed to the IHP Warranty Department at 1769 East Lawrence Street; Russellville, AL 35654 or visit our website at WWW.SUPERIORFIREPLACES.US.COM.

Printed in U.S.A. © 2014 Innovative Hearth Products
P/N 900247-00, Rev. B, 02/2018

Innovative Hearth Products
1769 East Lawrence Street • Russellville, AL 35654

SuperiorFireplaces.us.com

Record the following important information about your appliance:

Appliance model number	
Appliance serial number	
Date appliance was Installed	
Type of gas appliance uses	
Dealer name	

Innovative Hearth Products reserves the right to make changes at any time, without notice, in design, materials, specifications, prices and also to discontinue colors, styles and products. Consult your local distributor for fireplace code information.

INNOVATIVE HEARTH PRODUCTS

Printed in U.S.A. © 2015 Innovative Hearth Products
P/N 900467-01 Rev. B 01/2019

P900467-01

1769 East Lawrence Street • Russellville, AL 35654